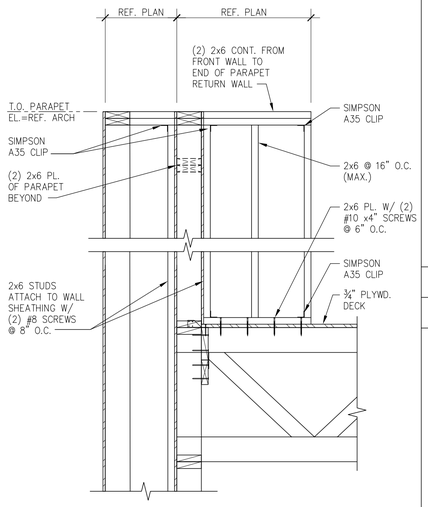

SECTION 19
SCALE: ¾"=1'-0" S-300

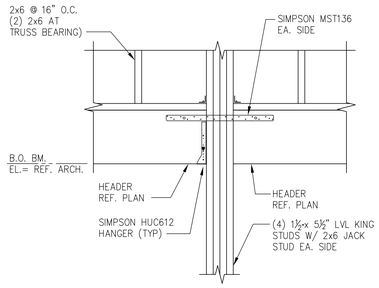

SECTION 16
SCALE: ¾"=1'-0" S-300

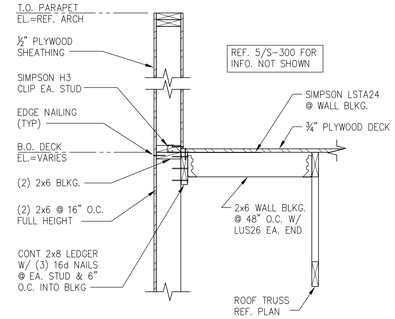

SECTION 11
SCALE: ¾"=1'-0" S-300

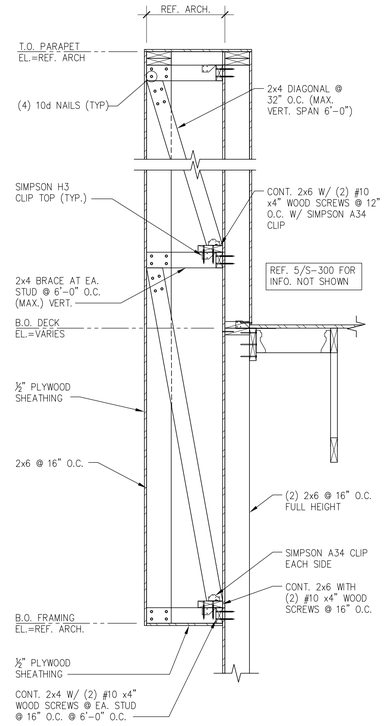

SECTION 7
SCALE: ¾"=1'-0" S-300

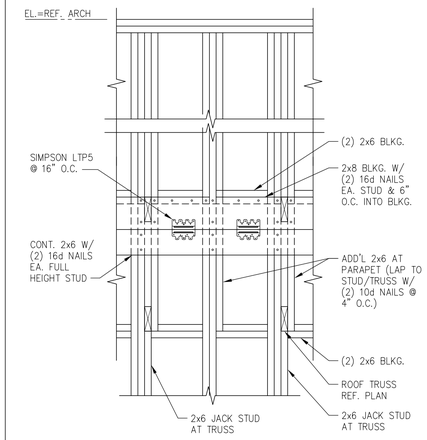

SECT."A"

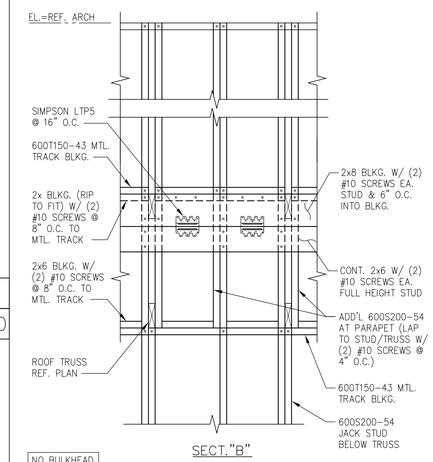

SECT."B"

NO BULKHEAD @ SIM.

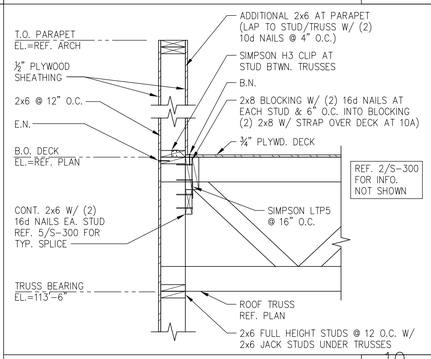

SECTION 10, 10A
SCALE: ¾"=1'-0" S-300

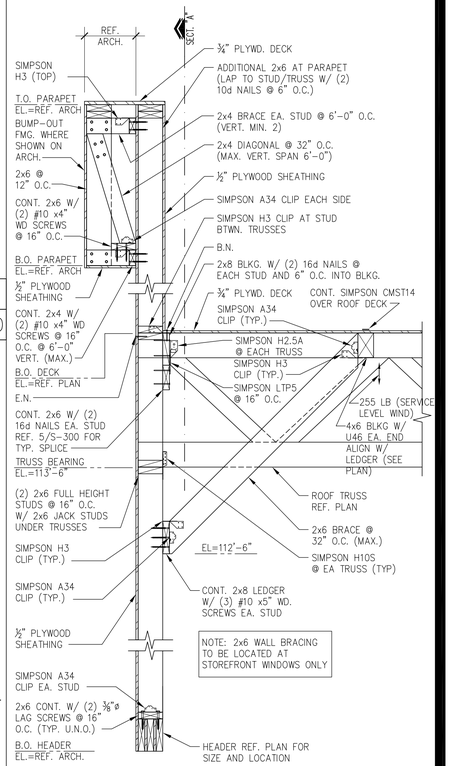

SECTION 2
SCALE: ¾"=1'-0" S-300

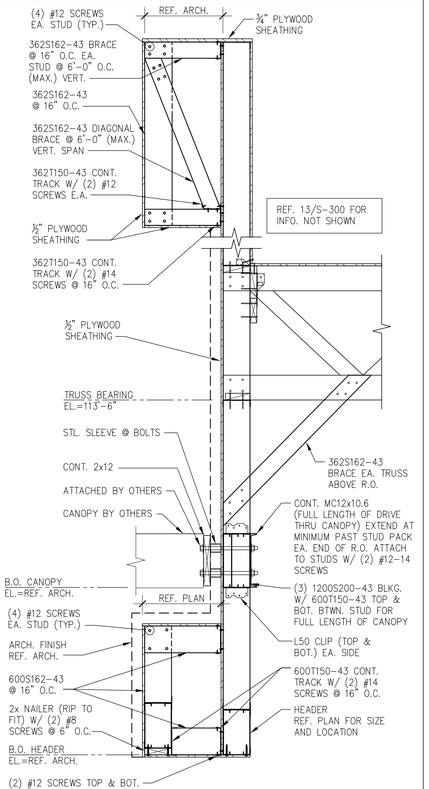

SECTION 17
SCALE: ¾"=1'-0" S-300

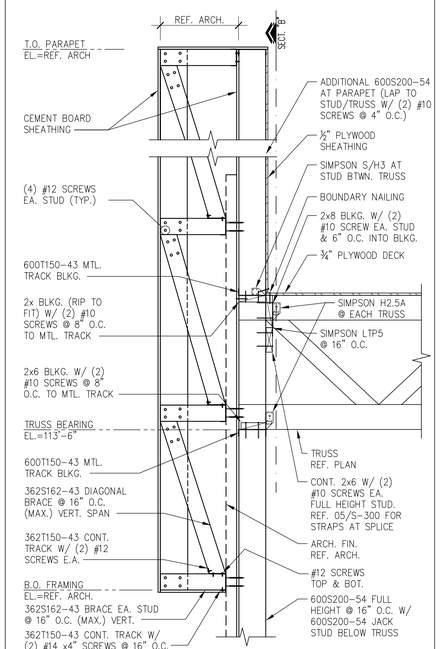

SECTION 13
SCALE: ¾"=1'-0" S-300

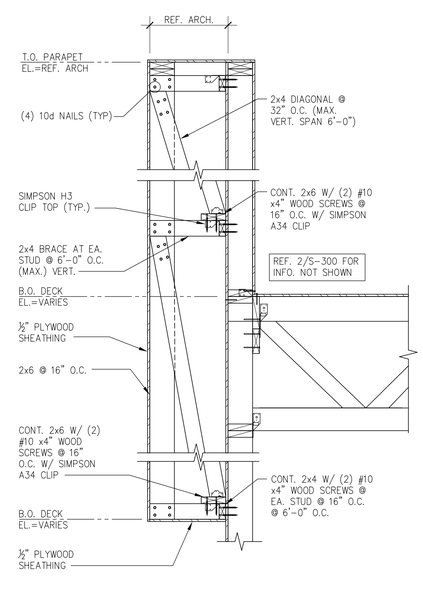

SECTION 9
SCALE: ¾"=1'-0" S-300

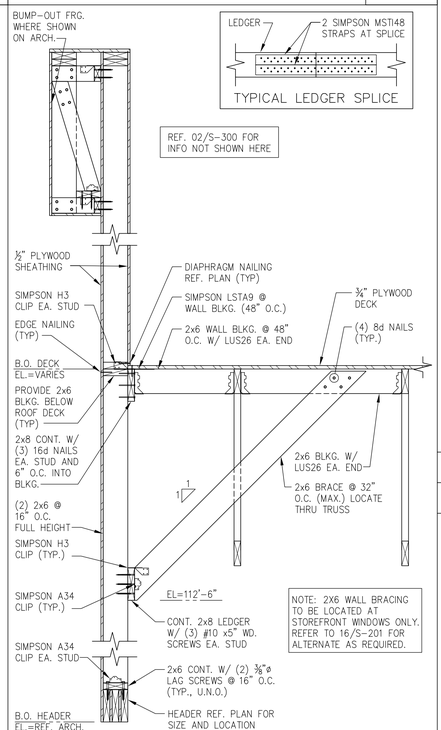

SECTION 5
SCALE: ¾"=1'-0" S-300

NOTE: TYPICAL TO ALL SECTIONS. REFER TO 13, 14, 17/S-301 AWNING BLOCKING REQUIREMENTS AS APPLICABLE. REFER TO PLAN.

PANDA EXPRESS CHINESE KITCHEN

PANDA RESTAURANT GROUP INC.
1683 Walnut Grove Ave.
Rosemead, California
91770
Telephone: 626.799.9898
Facsimile: 626.372.8288

All ideas, designs, arrangement and plans indicated or represented by this drawing are the property of Panda Express Inc. and were created for use on this specific project. None of these ideas, designs, arrangements or plans may be used by or disclosed to any person, firm, or corporation without the written permission of Panda Express Inc.

REVISIONS:

ISSUE DATE:

1	04.29.2021 ISSUE FOR PERMIT
2	06.04.2021 ISSUE FOR BID

DRAWN BY:

PANDA PROJECT #: - S8-22-D8135
C&P PROJECT #: - 2200775

Cuhaci & Peterson
Architects Engineers Planners
2600 Maitland Center Pkwy. Maitland, FL 32751
P (407) 661-9100
F (407) 661-9101
www.cp.com
Florida Corporate Certificate AAA C000526

06.04.2021

PANDA EXPRESS

TRUE WARM AND WELCOME 2300
SKYBROOKE BOULEVARD & STATE ROAD 54
LUTZ, FL 33558

S-300

FRAMING SECTIONS