OCCUPANT LOAD DATA:

OCCUPANT LOAD

UNFIXED SEATING = XX OCCUPANTS
- XXX SF (15 SF PER OCCUPANT) = XX
- XX ACTUAL SEATS

STANDING SPACE = XX OCCUPANTS
- XXX SF (5 SF PER OCCUPANT) =

KITCHEN / OFFICE = XX OCCUPANTS
- XXXX SF (200 SF PER OCCUPANT)

EGRESS / REFRIGERATION / RESTROOMS / UNUSED SPACE = XX OCCUPANTS
- XXX SF (0 SF PER OCCUPANT)

TOTAL = XX OCCUPANTS

LEGEND:

2"x6" EXTERIOR WOOD STUD WALL

2"x6" INTERIOR WOOD STUD WALL

2"x4" INTERIOR WOOD STUD WALL

TYPICAL SUBSTRATES FOR INTERIOR WALLS SHALL BE AS FOLLOWS:
KITCHEN AND STORAGE AREAS: 0'-0" TO 3'-0" - ⅝" DUROCK CEMENT BOARD,
3'-0" AND ABOVE - ⅝" PLYWOOD.
SERVICE AREA: ⅝" MIN. PLYWOOD
SALES AND SEATING AREAS: ⅝" GYPSUM BOARD

OCCUPANT LOAD DATA:

ZONING
COMMERCIAL
SPRINKLERED

CONSTRUCTION TYPE
V - B UNPROTECTED, NON

OCCUPANCY CLASSIFICATION
ASSEMBLY (RESTAURANT) 2067 SF (GROSS)

OCCUPANT LOAD

UNFIXED SEATING = 25 OCCUPANTS
- 376(15 SF PER OCCUPANT) = 25
- 18 ACTUAL SEATS

STANDING SPACE = 17 OCCUPANTS
- 83 SF (5 SF PER OCCUPANT)

KITCHEN/OFFICE = 12 OCCUPANTS
- 1116 SF (100 SF PER OCCUPANT)

EGRESS/REFRIGERATION/RESTROOMS/UNUSED SPACE = 0 OCCUPANTS
- 492 SF (O SF PER OCCUPANT)

TOTAL = 54 OCCUPANTS

LIFE SAFETY NOTES

1. SEE ELECTRICAL FOR EMERGENCY EGRESS LIGHTING
2. SEE SHEET A5.0 FOR DOOR SCHEDULE AND DOOR & FRAME TYPES.
3. PROVIDE FIRE EXTINGUISHERS, TYPE ABC, WALL HUNG, TOP @ 5'-0" A.F.F. (BY G.C.). - NUMBER AND LOCATION AS DETERMINED BY LOCAL FIRE MARSHAL.

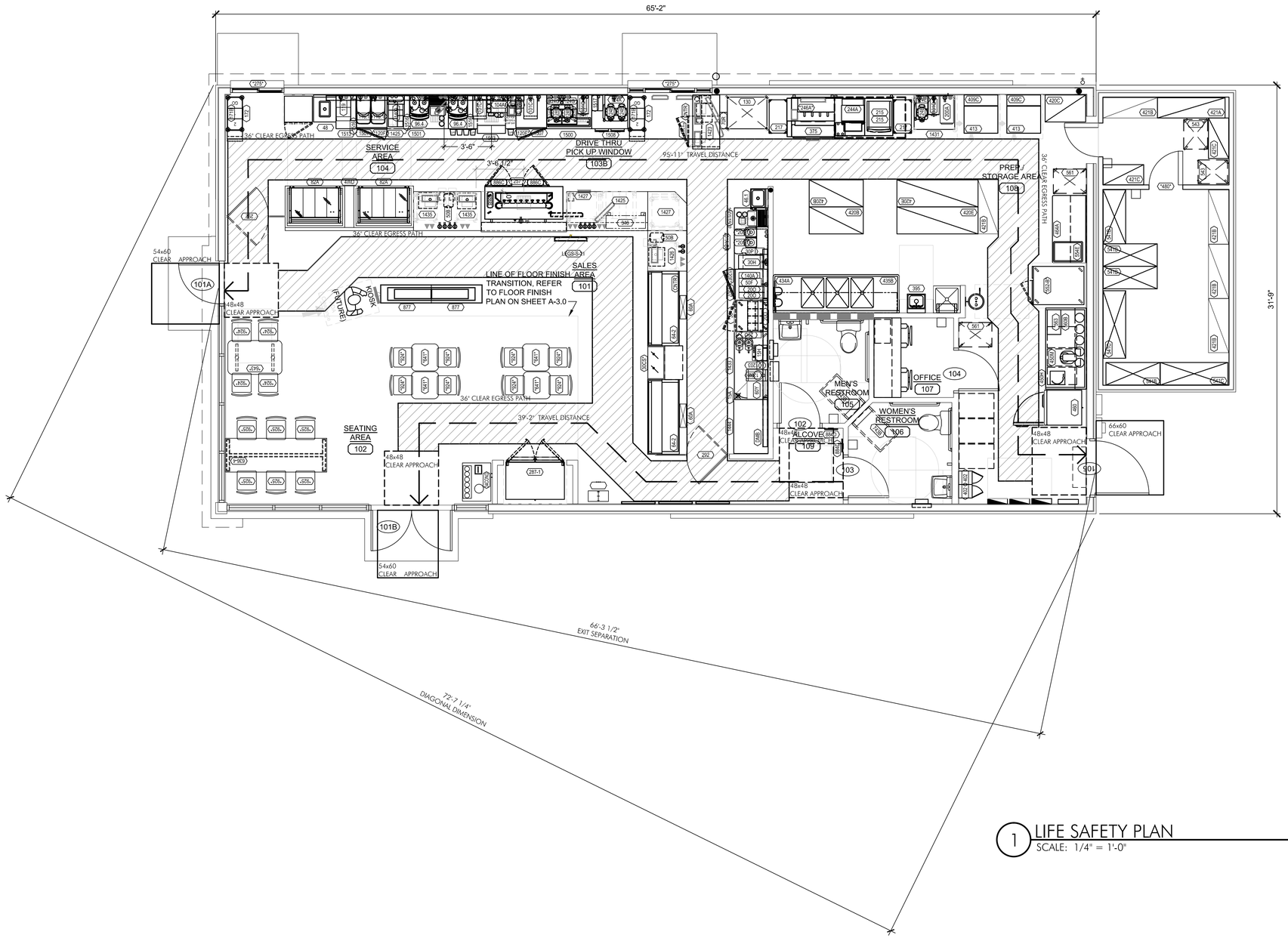

1 LIFE SAFETY PLAN
SCALE: 1/4" = 1'-0"

dunkin' brands

E+H ARCHITECTS, P.C.
750 OLD HICKORY BLVD., SUITE 50-2
BRENTWOOD, TN 37027
p|615.377.3111
www.EandHArch.com

NO	DESCRIPTION	DATE
	REVISIONS	

1402 WESTERN BOULEVARD
TARBORO, NORTH CAROLINA

LIFE SAFETY PLAN

P C # 365111

NORTH CAROLINA REGISTERED SEAL 16017 ARCHITECT ROY A. WILLIAMS

A0.1

PERMIT ISSUE DATE: 10-20-2023

GENERAL NOTES

1. TYPICAL SUBSTRATES FOR INTERIOR WALLS SHALL BE AS FOLLOWS:
   PREP/ KITCHEN AND STORAGE AREAS:
   0'-0" TO 3'-0" - ⅝" DUROCK CEMENT BOARD, 3'-0" AND ABOVE - ⅝" ORIENTED STRAND BOARD (OSB)
   SERVICE AREA:
   ⅝" MIN. ORIENTED STRAND BOARD (OSB), ⅝" DUROCK CEMENT BOARD BEHIND PORCELAIN/ CERAMIC TILES.
   SALES AND SEATING AREAS:
   ⅝" GYPSUM BOARD, ⅝" DUROCK CEMENT BOARD BEHIND CERAMIC TILES, ⅝" ORIENTED STRAND BOARD @ DECORATIVE PLAM "WOOD" WALLS.
   RESTROOMS:
   ⅝" DUROCK CEMENT BOARD

- GENERAL CONTRACTOR SHALL PROVIDE ADEQUATE BLOCKING AS REQUIRED THROUGHOUT: IN RESTROOMS FOR GRAB BARS, LAVATORIES, HAND DRIERS, MIRRORS, PAPER TOWEL DISPENSERS, SOAP DISPENSERS, AND OTHER ACCESSORIES UNLESS OTHERWISE NOTED; IN SERVICE AREA FOR: VDU, WALL SHELVES, ETC.

2. DIMENSIONS SHOWN ARE TO THE FACE OF FINISH.
3. REFER TO EQUIPMENT "K" SHEETS FOR INFORMATION REGARDING THE EQUIPMENT AND EQUIPMENT LAYOUT.
4. REFER TO NEXT GENERATION PROTOTYPE FOR DOOR SCHEDULE AND DOOR & FRAME TYPES..
5. THESE PLANS ARE CONSIDERED MINIMUM DUNKIN' CORPORATE DESIGN REQUIREMENTS. THE STRUCTURAL DESIGN, FOOTING DESIGN, ADA COMPLIANCE AND GENERAL BUILDING REQUIREMENTS MUST BE EVALUATED AND CERTIFIED BY AN ARCHITECT REGISTERED IN THE STATE WHERE THIS STRUCTURE IS TO BE BUILT.
6. SEE SITE PLAN PROVIDED BY OWNER FOR NUMBER AND LOCATION OF THE FOLLOWING SITE FURNISHINGS: TABLE WITH SEATING, ADA TABLE WITH SEATING, TRASH CAN NEXT TO EXTERIOR SEATING AREA , TRASH CAN WITH CHUTE NEXT TO DRIVE-THRU AREA , AND GROUNDSKEEPER SMOKING MANAGEMENT RECEPTACLE. SEE NATIONAL ACCOUNT SOURCE INFORMATION FOR MANUFACTURER / SUPPLIER.
7. PROVIDE FIRE EXTINGUISHERS. TYPE ABC, WALL HUNG, TOP @ 5'-0" A.F.F. (BY G.C.). - NUMBER AND LOCATION AS DETERMINED BY LOCAL CODE
8. IF LARGER OFFICE IS REQUIRED, EXPAND TOWARD B.O.H, NOT F.O.H. SEEK D.B.I APPROVAL PRIOR TO PROCEEDING
9. **LAYOUT NOTES:**
   A. ARCHITECT & G.C. TO ENSURE 40" MINIMUM CLEAR ACCESS INTO AND THROUGHOUT THE STORE FOR DELIVERY OF LARGE EQUIPMENT ITEMS.
   B. FOR STORES WITH CELLARS, THE FLOOR, WALL, AND CEILINGS FINISHES WILL BE THE SAME FINISHES FOR PREP. AREA. REFER TO THE MASTER FINISH SCHEDULES IN THE NEXT GENERATION PROTOTYPE FOR THE PROPER FINISHES.
   C. FOR LOCATIONS WITH INTERIOR WALK-INS, PROVIDE:
      - FLOOR DRAIN WITHIN 5' FT. OF WALK-IN FOR CONDENSATE DRAIN CONNECTION FROM INTERIOR OF WALK-IN (TYP.).
      - 2" MIN. AIR SPACE BETWEEN WALK-IN AND ALL ADJACENT WALLS.
   D. FOR NON-DEPRESSED SLAB FOR WALK-IN BOX AN INTERIOR RAMP SHALL BE PROVIDED.
10. **INDOOR AIR QUALITY MANAGEMENT REQUIREMENTS**:
   B. DURING CONSTRUCTION THE USE OF SMOKING/TOBACCO PRODUCTS INSIDE THE BUILDING IS PROHIBITED.
   C. CONTRACTOR AND SUBCONTRACTORS SHOULD MAKE EVERY EFFORT TO MAINTAIN CLEAN WORK AREAS.
   D. CONSTRUCTION ACTIVITIES THAT PRODUCE DUST SHOULD TAKE PLACE PRIOR TO HVAC STARTUP/USE, AND EVERY EFFORT SHOULD BE MADE TO DIRECT THESE POLLUTANTS TO THE OUTDOORS WITH FANS.
   E. MATERIALS THAT ARE ABSORPTIVE SHOULD NOT BE BROUGHT ON-SITE UNTIL THE BUILDING IS SUFFICIENTLY DRIED IN, AND SHOULD BE ELEVATION FROM THE GROUND AND COVERED WITH VISQUEEN WHILE STORED ON SITE.
   F. IF THE HVAC SYSTEMS WILL BE USED DURING CONSTRUCTION ACTIVITIES, TEMPORARY FILTRATION (MERV 8) SHOULD BE USED ON ALL RETURN AIR INTAKES, AND THE FILTERS INSIDE THE UNIT SHOULD BE REPLACED PRIOR TO BUILDING TURN OVER.
   G. ALL INDOOR AIR QUALITY MANAGEMENT POLICIES OUTLINED ABOVE ARE PHOTOGRAPHED AT 25%, 50%, AND 75% PROJECT COMPLETION TO CONFIRM MEASURES WERE FOLLOWED.
11. **CONSTRUCTION WASTE RECYCLING REQUIREMENTS:**
   A. ALL CONSTRUCTION-RELATED RECYCLABLE WASTE SHOULD BE RECYCLED/REUSED OR OTHERWISE DIVERTED FROM LANDFILL WHENEVER POSSIBLE.
   B. AT MINIMUM ALL CONCRETE, METAL, AND PLASTIC THAT MEETS LOCAL RECYCLING STANDARDS SHOULD BE RECYCLED.
   C. WHERE LOCAL MUNICIPALITIES OR VENDORS OFFER COMMINGLED RECYCLING OPPORTUNITIES TO HELP ACHIEVE OVER 50% CONSTRUCTION WASTE DIVERSION RATE FROM LANDFILL, FRANCHISEE SHOULD PURSUE.

4 TABLE LEGEND
1/4" = 1'-0" NOTE:

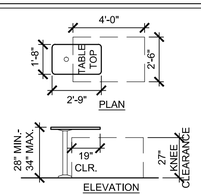

FIXED ACCESSIBILITY TABLE

3 ACCESSIBILITY DETAILS
1/4" = 1'-0" NOTE:

PLAN NOTES:

1. CASEWORK BY OTHERS.
2. SLIDING DRIVE-THRU WINDOW. - SEE DUNKIN' CONSTRUCTION SPECIFICATIONS ON GN SHEETS IN THE NEXT GENERATION PROTOTYPE AND NATIONAL ACCOUNTS ON THE EXTRANET.
3. ROOF LADDER - WHERE ALLOWED OR REQUIRED BY CODE.
4. JANITOR'S SINK - PROVIDE DEDICATED WATER SUPPLY FOR P&G DISPENSER (SEE NATIONAL ACCOUNTS). P&G EQUIPMENT INSTALLED BY VENDOR - REFER TO DETAIL IN THE NEXT GENERATION PROTOTYPE.
5. SURFACE MOUNT HAND DRYER W/ BRANDING AND SUSTAINABILITY MESSAGE; REFER TO RESTROOM EQUIP. SCHEDULE IN THE NEXT GENERATION PROTOTYPE.
6. P.O.S. OUTLET BOX (48" A.F.F.) WITH ½" CONDUIT W/ PULLSTRING TO CEILING.
7. PROVIDE SHELF AND STRAPPING FOR TANK WATER HEATER (WHEN USED) MOUNTED OVER MOP SINK- PER LOCAL CODE.
8. CONC. FILLED STEEL BOLLARD - SEE DETAIL IN THE NEXT GENERATION PROTOTYPE.
9. 3 COMPARTMENT SINK W/ 2 INTEGRATED DRAIN BOARDS- PROVIDE DEDICATED WATER SUPPLY FOR P&G DISPENSER (SEE NATIONAL ACCOUNTS). P&G EQUIPMENT INSTALLED BY VENDOR- SEE DETAIL IN THE NEXT GENERATION PROTOTYPE.
10. FROST PROOF HOSE BIB.
11. 2" X 2" STAINLESS STEEL CORNER GUARDS, FULL LENGTH OF CORNER UP TO CEILING (TYPICAL THROUGHOUT BACK OF HOUSE).
12. ELECTRICAL PANELS; SEE ELECTRICAL SHEETS.
13. HAND SINKS ARE REQUIRED WITHIN A 25 FT, RADIUS OF ALL WORK STATIONS IN SERVICE AREAS AND KITCHEN (OR PER LOCAL CODE IF MORE STRINGENT).
14. SWING GATE @ HAND OFF AREA BY MILLWORK VENDOR.
15. ELECTRICAL METER - PROVIDE APPROPRIATE CONNECTION TO ELECTRICAL PANELS AS PER FEDERAL, STATE AND LOCAL CODES.
16. PROVIDE DIRECT LINE W/ TEMPERATURE REGULATOR VALVE FROM HWH TO ALL HAND WASHING SINKS.
17. TANK TYPE HOT WATER HEATER (SEE SPECS. IN THE NEXT GENERATION PROTOTYPE), MAY BE USED IN PLACE OF RINNAI UNIT - COORDINATE EXACT SIZE W/ LOCAL REQUIREMENTS.
18. G.C. TO PROVIDE ANCHOR BOLTS FOR SLAB MOUNTED SAFE IN OFFICE- REFER TO SPECIFICATIONS TO BE PROVIDED BY FRANCHISEE.
19. WATER FILTRATION SYSTEM (BRANCH OFF MAIN LINE) FOR COFFEE BREWING EQUIPMENT, BEVERAGE MACHINES, ETC.; LOCATE ABOVE WATER METER.
20. WINDOW SHADE; SEE CONSTRUCTION SPECIFICATIONS IN THE NEXT GENERATION PROTOTYPE AND NATIONAL ACCOUNTS SUPPLIER ON THE EXTRANET.
21. CANOPY OVERHEAD.
22. MILLWORK SUPPLIER SHALL PROVIDE ACCESS FOR UTILITIES & CLEANING AT ALL FRONT LINE MILLWORK.
23. PROVIDE CLEAR ANODIZED ALUM EDGE TRIM (SCHLUTER "JOLLY") FOR FULL HEIGHT OF WALL @ EXTERNAL CORNERS & ALL LOCATIONS WHERE TILE ENDS.
24. PROJECTION OF LOWER BAND @ MONOLITH. SEE EXTERIOR ELEVATIONS.
25. PROJECTION OF ORANGE ACCENT BEAM. SEE EXTERIOR ELEVATIONS.
26. EXTERIOR ACCENT PANEL. SEE EXTERIOR ELEVATIONS.
27. "PLAN TUBE" MOUNTED ON WALL.
28. EYE WASH STATION; REFER TO CONSTRUCTION SPECS IN NEXT GENERATION PROTOTYPE SET.

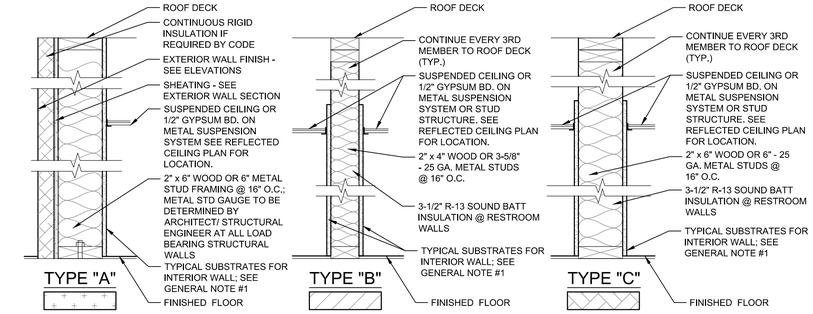

NOTES:

1) ALL JUNCTIONS BETWEEN THE WALL SURFACES AND THE EDGES OF ATTACHED EQUIPMENT AS WELL AS ALL ANNULAR OPENINGS AROUND PIPES DUCTS OR OTHER CONDUITS WERE THEY PASS THROUGH WALLS AND FLOOR SHALL BE SEALED WITH A MIXTURE OF STEEL WOOL AND APPROVED CAULK/ SEALING COMPOUND.
2) ENSURE TOP PLATES AND THE JOINTS BETWEEN WALLS AND CEILINGS ARE SEALED.
3) DUCT SHAFT & PIPING PENETRATIONS: OPENINGS FROM CRAWL SPACE AND ATTIC SHALL BE SEALED.
4) ALL SHAFTS: PROPER FLASHING AROUND FLUE AND GAPS SEALED AND CAULKED
5) ALL PENETRATIONS AT EXTERIOR WALLS SHALL BE SEALED INCLUDING VENTS AND ELECTRICAL CONDUIT & BOXES.
6) PROVIDE CORROSION-PROOF RODENT/BIRD SCREENS (E.G., STEEL MESH) FOR ALL BUILDING OPENINGS THAT CANNOT BE FULLY SEALED AND CAULKED (E.G., VENTILATION SYSTEM INTAKE / EXHAUST OUTLETS AND ATTIC VENT OPENINGS).
7) INTERIOR WALL INSULATION & FIRE BLOCKING
   * ALL INTERIOR PARTITIONS ARE TO BE INSULATED USING UNFACED BATT INSULATION. REFER TO PARTITION TYPE KEYS THROUGHOUT PLANS.
   * UNFACED BATT INSULATION ALSO ACTS AS FIRE BLOCKING WITHIN THE STUD WALLS; SECURE INSULATION WITHIN STUD SPACING.
   * BATT INSULATION SHALL FILL THE ENTIRE DEPTH OF WALL CAVITY. PACK TIGHTLY AROUND PIPING OR CONDUIT WITHIN WALL CAVITY.
   * EXTEND INSULATION 12" ABOVE CEILING LINE.

2 PARTITION TYPES
1-1/2" = 1'-0" NOTE:

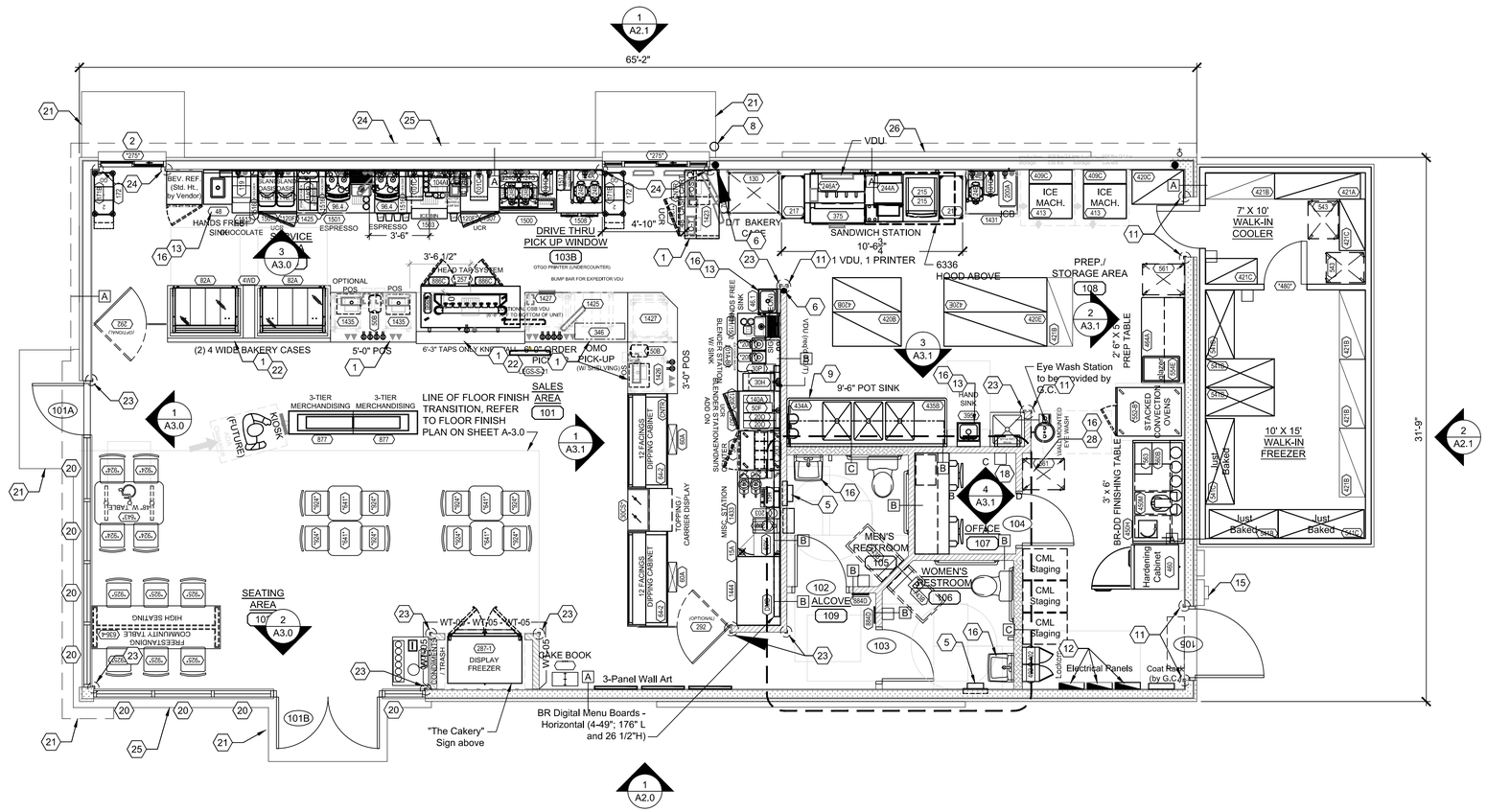

1 FLOOR PLAN
SCALE: 1/4" = 1'-0"

dunkin' brands

e+H ARCHITECTS, P.C.
750 OLD HICKORY BLVD., SUITE 150-2
BRENTWOOD, TN 37027
p|615.377.3111
www.EandHArch.com

NO	DESCRIPTION	DATE
	REVISIONS	

1402 WESTERN BOULEVARD
TARBORO, NORTH CAROLINA

DEPICTIVE FLOOR PLAN & NOTES

P C # 365111

NORTH CAROLINA REGISTERED SEAL 16017 ARCHITECT ROY A. WILLIAMS

A1.0

PERMIT ISSUE DATE: 10-20-2023

GENERAL NOTES

1. TYPICAL SUBSTRATES FOR INTERIOR WALLS SHALL BE AS FOLLOWS:
   PREP/ KITCHEN AND STORAGE AREAS:
   0'-0" TO 3'-0" - ⅝" DUROCK CEMENT BOARD, 3'-0" AND ABOVE - ⅝" ORIENTED STRAND BOARD (OSB)
   SERVICE AREA:
   ⅝" MIN. ORIENTED STRAND BOARD (OSB), ⅝" DUROCK CEMENT BOARD BEHIND PORCELAIN/ CERAMIC TILES.
   SALES AND SEATING AREAS:
   ⅝" GYPSUM BOARD, ⅝" DUROCK CEMENT BOARD BEHIND CERAMIC TILES, ⅝" ORIENTED STRAND BOARD @ DECORATIVE PLAM "WOOD" WALLS.
   RESTROOMS:
   ⅝" DUROCK CEMENT BOARD

- GENERAL CONTRACTOR SHALL PROVIDE ADEQUATE BLOCKING AS REQUIRED THROUGHOUT: IN RESTROOMS FOR GRAB BARS, LAVATORIES, HAND DRIERS, MIRRORS, PAPER TOWEL DISPENSERS, SOAP DISPENSERS, AND OTHER ACCESSORIES UNLESS OTHERWISE NOTED; IN SERVICE AREA FOR: VDU, WALL SHELVES, ETC.

2. DIMENSIONS SHOWN ARE TO THE FACE OF FINISH.
3. REFER TO EQUIPMENT "K" SHEETS FOR INFORMATION REGARDING THE EQUIPMENT AND EQUIPMENT LAYOUT.
4. REFER TO NEXT GENERATION PROTOTYPE FOR DOOR SCHEDULE AND DOOR & FRAME TYPES..
5. THESE PLANS ARE CONSIDERED MINIMUM DUNKIN' CORPORATE DESIGN REQUIREMENTS. THE STRUCTURAL DESIGN, FOOTING DESIGN, ADA COMPLIANCE AND GENERAL BUILDING REQUIREMENTS MUST BE EVALUATED AND CERTIFIED BY AN ARCHITECT REGISTERED IN THE STATE WHERE THIS STRUCTURE IS TO BE BUILT.
6. SEE SITE PLAN PROVIDED BY OWNER FOR NUMBER AND LOCATION OF THE FOLLOWING SITE FURNISHINGS: TABLE WITH SEATING, ADA TABLE WITH SEATING, TRASH CAN NEXT TO EXTERIOR SEATING AREA , TRASH CAN WITH CHUTE NEXT TO DRIVE-THRU AREA , AND GROUNDSKEEPER SMOKING MANAGEMENT RECEPTACLE. SEE NATIONAL ACCOUNT SOURCE INFORMATION FOR MANUFACTURER / SUPPLIER.
7. PROVIDE FIRE EXTINGUISHERS. TYPE ABC, WALL HUNG, TOP @ 5'-0" A.F.F. (BY G.C.). - NUMBER AND LOCATION AS DETERMINED BY LOCAL CODE
8. IF LARGER OFFICE IS REQUIRED, EXPAND TOWARD B.O.H, NOT F.O.H. SEEK D.B.I APPROVAL PRIOR TO PROCEEDING
9. **LAYOUT NOTES:**
   A. ARCHITECT & G.C. TO ENSURE 40" MINIMUM CLEAR ACCESS INTO AND THROUGHOUT THE STORE FOR DELIVERY OF LARGE EQUIPMENT ITEMS.
   B. FOR STORES WITH CELLARS, THE FLOOR, WALL, AND CEILINGS FINISHES WILL BE THE SAME FINISHES FOR PREP. AREA. REFER TO THE MASTER FINISH SCHEDULES IN THE NEXT GENERATION PROTOTYPE FOR THE PROPER FINISHES.
   C. FOR LOCATIONS WITH INTERIOR WALK-INS, PROVIDE:
      - FLOOR DRAIN WITHIN 5' FT. OF WALK-IN FOR CONDENSATE DRAIN CONNECTION FROM INTERIOR OF WALK-IN (TYP.).
      - 2" MIN. AIR SPACE BETWEEN WALK-IN AND ALL ADJACENT WALLS.
   D. FOR NON-DEPRESSED SLAB FOR WALK-IN BOX AN INTERIOR RAMP SHALL BE PROVIDED.
10. **INDOOR AIR QUALITY MANAGEMENT REQUIREMENTS**:
   B. DURING CONSTRUCTION THE USE OF SMOKING/TOBACCO PRODUCTS INSIDE THE BUILDING IS PROHIBITED.
   C. CONTRACTOR AND SUBCONTRACTORS SHOULD MAKE EVERY EFFORT TO MAINTAIN CLEAN WORK AREAS.
   D. CONSTRUCTION ACTIVITIES THAT PRODUCE DUST SHOULD TAKE PLACE PRIOR TO HVAC STARTUP/USE, AND EVERY EFFORT SHOULD BE MADE TO DIRECT THESE POLLUTANTS TO THE OUTDOORS WITH FANS.
   E. MATERIALS THAT ARE ABSORPTIVE SHOULD NOT BE BROUGHT ON-SITE UNTIL THE BUILDING IS SUFFICIENTLY DRIED IN, AND SHOULD BE ELEVATION FROM THE GROUND AND COVERED WITH VISQUEEN WHILE STORED ON SITE.
   F. IF THE HVAC SYSTEMS WILL BE USED DURING CONSTRUCTION ACTIVITIES, TEMPORARY FILTRATION (MERV 8) SHOULD BE USED ON ALL RETURN AIR INTAKES, AND THE FILTERS INSIDE THE UNIT SHOULD BE REPLACED PRIOR TO BUILDING TURN OVER.
   G. ALL INDOOR AIR QUALITY MANAGEMENT POLICIES OUTLINED ABOVE ARE PHOTOGRAPHED AT 25%, 50%, AND 75% PROJECT COMPLETION TO CONFIRM MEASURES WERE FOLLOWED.
11. **CONSTRUCTION WASTE RECYCLING REQUIREMENTS:**
   A. ALL CONSTRUCTION-RELATED RECYCLABLE WASTE SHOULD BE RECYCLED/REUSED OR OTHERWISE DIVERTED FROM LANDFILL WHENEVER POSSIBLE.
   B. AT MINIMUM ALL CONCRETE, METAL, AND PLASTIC THAT MEETS LOCAL RECYCLING STANDARDS SHOULD BE RECYCLED.
   C. WHERE LOCAL MUNICIPALITIES OR VENDORS OFFER COMMINGLED RECYCLING OPPORTUNITIES TO HELP ACHIEVE OVER 50% CONSTRUCTION WASTE DIVERSION RATE FROM LANDFILL, FRANCHISEE SHOULD PURSUE.

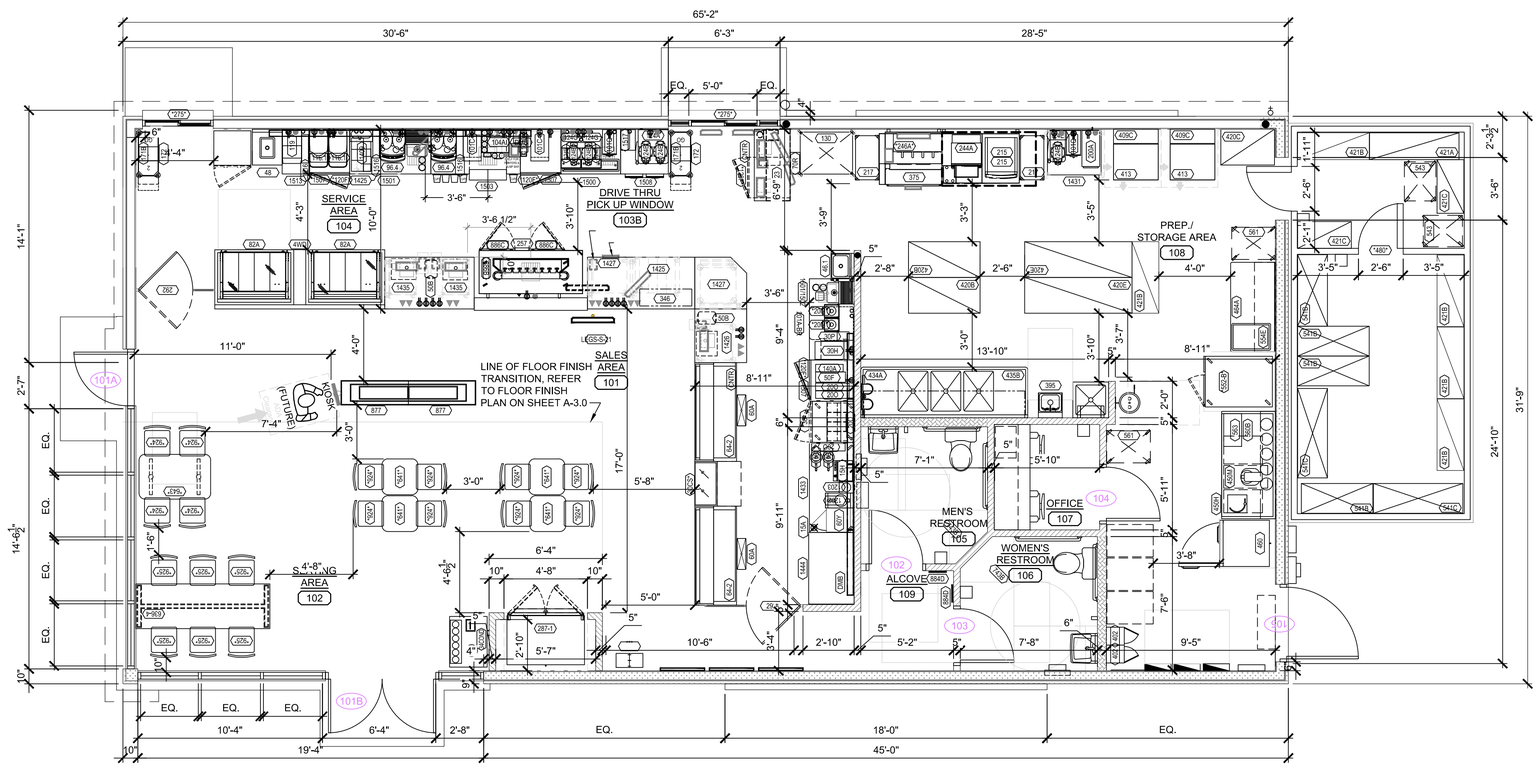

1 DIMENSION FLOOR PLAN
SCALE: 1/4" = 1'-0"

dunkin' brands

e+h ARCHITECTS, P.C.
750 OLD HICKORY BLVD., SUITE 150-2
BRENTWOOD, TN 37027
p|615.377.3111
www.EandHArch.com

NO	DESCRIPTION	DATE
	REVISIONS	

1402 WESTERN BOULEVARD
TARBORO, NORTH CAROLINA

DIMENSION FLOOR PLAN

P C # 365111

NORTH CAROLINA REGISTERED SEAL 16017 ARCHITECT ROY A. WILLIAMS

A1.1

PERMIT ISSUE DATE: 10-20-2023

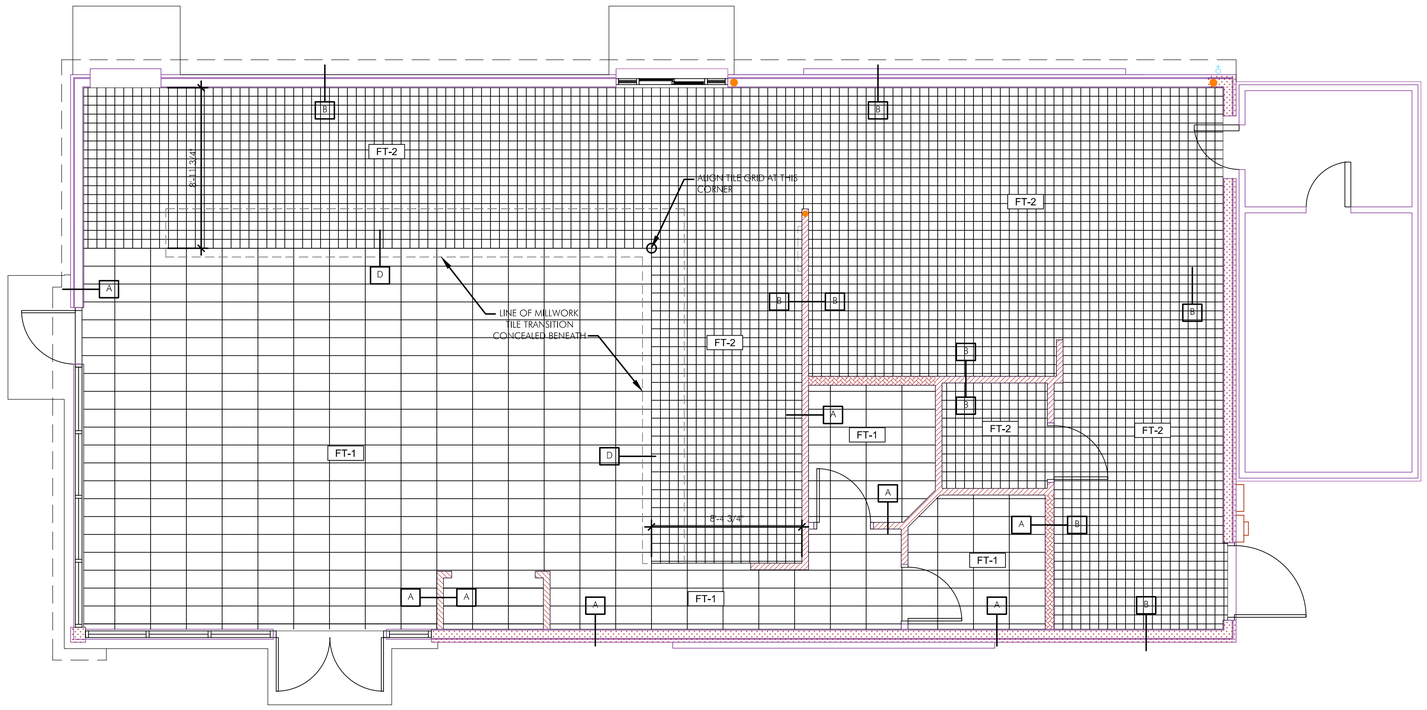

1 FLOOR FINISH PLAN
SCALE: 1/4" = 1'-0"

TYPE "A"
CUSTOMER AREAS

TYPE "B"
SERVICE AREAS AND KITCHEN

2 WALL TILE BASE DETAILS
1" = 1'-0" NOTE:

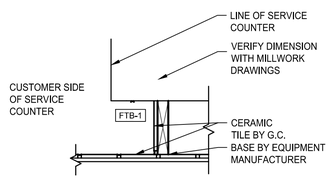

TYPE "D"
CASEWORK
SERVICE AREAS AND PUBLIC AREAS

3 MILLWORK BASE DETAILS
1" = 1'-0" NOTE:

FLOOR FINISH SCHEDULE

TAG	MFG:	PRODUCT:	COLOR:	DIMENSIONS:	ADDITIONAL INFORMATION:
FT-1	FLOOR TILE	DALTILE PF05	ASH GREY STD	12X24	GROUT W/ MAPEI ULTRACOLOR PLUS FA #27 - SILVER
FT-2	FLOOR TILE	DALTILE DB TEXTURES	ASHEN GRAY STD	6X6	GROUT W/ MAPEI ULTRACOLOR PLUS FA #47 - CHARCOAL
FTB-1	FLOOR TILE BASE	DALTILE PF05	ASH GREY STD	12X24	CUT TILE BASE TO 6" HIGH, INSTALL WITH BRUSHED NICKEL SHLUTER STRIP CAP JOLLY - ANIGB
FTB-2	FLOOR TILE BASE	DALTILE DB TEXTURES	ASHEN GRAY STD	5" X 6" COVE BASE	

dunkin' brands.

E + H ARCHITECTS, P.C.
750 OLD HICKORY BLVD.,
SUITE 150-3
BRENTWOOD, TN 37027
p|615.377.3111
www.EandHArch.com

NO	DESCRIPTION	DATE
	REVISIONS	

1402 WESTERN BOULEVARD
TARBORO, NORTH CAROLINA

FLOOR FINISH PLAN

P C # 365111

NORTH CAROLINA REGISTERED SEAL 16017 ARCHITECT ROY A. WILLIAMS

A1.2

GENERAL NOTES:

1. ALL INTERIOR & EXTERIOR LIGHTING TO BE LED (INCLUDING IN THE WALK-IN BOX).
2. EFFECTIVE LIGHTING CONTROLS STANDARD THROUGHOUT. OCCUPANCY SENSORS TO BE USED IN SPACES NOT ACTIVELY USED THROUGHOUT THE DAY (RESTROOMS, OFFICE, CONFERENCE ROOMS AND ETC..).
   INTEGRATE OCCUPANCY SENSORS IN SPACES NOT ACTIVELY USED THROUGHOUT THE DAY INCLUDING: RESTROOMS, OFFICE, WALK-IN BOX, CONFERENCE ROOMS & CLOSETS.
3. REFER TO MASTER FINISH SCHEDULE FOR CEILING FINISHES.
4. OPEN CEILING IN SALES & SEATING AREA TO BE ALTERNATIVE OPTION.
5. ALL DEVICES (DIFFUSERS, RETURNS, SMOKE DETECTORS, ETC.) TO MATCH CEILING. WHEN OPEN CEILING IS USED ALL PIPES AND DUCTS AND ALL OTHER ITEMS THAT ARE ON CEILING TO BE PAINTED TO MATCH CEILING.
6. LAYOUT NOTES:
   A. PROVIDE EMERGENCY LIGHTS & SMOKE DETECTORS AS REQUIRED BY LOCAL GOVERNING CODE.
   B. ADD THE RH REMOTE WEATHER PROOF EMERGENCY HEAD (PRODUCT #Z1PB) TO THE EXTERIOR EGRESS DOORS IF REQUIRED BY CODE.
   C. HOOD OVER SANDWICH STATION IS RECOMMENDED BUT NOT REQUIRED. ARCHITECT / ENGINEER MUST REVIEW LOCAL CODES TO DETERMINE WHETHER A HOOD IS REQUIRED. IF A HOOD IS NOT USED IT IS REQUIRED THAT AN EXHAUST GRILL BE PLACED IN THE CEILING ABOVE THE SANDWICH STATION. IF NO EXHAUST IS PROVIDED AT THE SANDWICH STATION THE FRP PANELS AND / OR DIGITAL MENU BOARDS COULD BE AFFECTED BY THE HEAT FROM THE SANDWICH STATION.
7. MUSIC SYSTEM NOTES: THE MUSIC SYSTEM IS A REQUIREMENT OF THE BRAND. ARCHITECTS TO FOLLOW ALL GUIDELINES LISTED BELOW.
   A. MUSIC SYSTEM IS REQUIRED IN ALL NEW AND REMODEL STORES. ALL CEILING SPEAKERS TO BE FLUSH MOUNTED @ GYP. BOARD CLG. & ACT CLG. SPEAKERS @ OPEN CEILING TO BE MOUNTED ON LOWER CORD OF ROOF TRUSSES.ALL INTERIOR SPEAKERS TO MATCH SURFACE IT IS MOUNTED ON. ALL EXTERIOR SPEAKERS TO BE BLACK, WITH EXTERIOR GRADE CONSTRUCTION.
   B. ONE SPEAKER IN EACH RESTROOM- FLUSH MOUNT.
   C. A MINIMUM OF TWO SPEAKERS IN THE SEATING AREA NO SPEAKERS IN THE SERVICE AREA.
   D. A MINIMUM OF TWO SPEAKERS AT EXTERIOR SEATING AREAS WHERE APPLICABLE.
   E. SPEAKER AT EXTERIOR OF BUILDING ADJACENT TO ENTRY.
   F. PROVIDE AND INSTALL SEPARATE VOLUME CONTROLS FOR EACH AREA (RESTROOMS, SEATING AREA, EXTERIOR)
   G. HARDWARE TO BE INSTALLED IN THE OFFICE. FIELD VERIFY AND COORDINATE WITH FRANCHISE FOR THE EXACT LOCATION OF THE UNIT AND VOLUME CONTROLS.

PLAN NOTES:

1. GYPSUM WALL BOARD CEILING.
2. HOOD FOR MINI-RACK OVEN: HOOD SHROUD IS OPTIONAL IF LOCAL JURISDICTION ALLOWS; EXHAUST FAN IS REQUIRED PER STANDARDS.
3. FLUE FOR HOT WATER HEATER.
4. EXHAUST HOOD FOR SANDWICH STATION WITH ROOF FAN REQUIRED PER STANDARDS.
5. DIGITAL MENU BOARDS TO BE CENTERED WITH POS STATION AT FRONT LINE; MAINTAIN 2" CLEARANCE BOTH ENDS OF SYSTEM FOR UNIT VENTILATION.
6. ARCHITECT TO ENSURE THAT ADEQUATE DISTANCE IS MAINTAINED BETWEEN DIGITAL MENU BOARDS AND OTHER OBSTRUCTIONS SUCH AS LIGHTS, SPRINKLER HEADS, CAMERAS, AND TOASTER/OVEN. 36" MIN DISTANCE BETWEEN DMBS AND EACH OBSTRUCTION IS PREFERRED. LIGHTS PLACED TOO CLOSE TO DIGITAL MENUBOARD SYSTEM MAY CAUSE UNWANTED GLARE. HEAT FROM TOASTERS WILL LEAD TO SCREEN FAILURE
7. DIGITAL MENU BOARD (DMB) MINIMUM CLEARANCES:
   HORIZONTAL MOUNT:
   - 4- 49" (DEFAULT SIZE) DIAGONAL BOARDS IS 176" L (14'-8") AND 26 1/2"H (2'-2 1/2")
   - 4- 43" DIAGONAL BOARDS 155" L (12'-11") AND 23 3/4" H (1'-11 3/4")
   - 4- 32" DIAGONAL BOARDS IS 118" L (9'-10") AND 19" H (1'-7")
8. 24"x24" ACCESS PANEL.
9. "LROD" PANEL ARTWORK - SEE INTERIOR ELEVATIONS.REFER TO DETAIL IN THE NEXT GENERATION PROTOTYPE.
10. G.C. TO PROVIDE BLOCKING TO INSTALL CEILING MOUNT POLE AND BUTTERFLY MOUNT (PROVIDED BY VENDOR) FOR OPTIONAL ORDER STATUS BOARD. TELEHOOK TH-1040 WITH (1) SCREEN MOUNTING PLATE.
11. CUSTOM LIGHT BAR MOUNTED @ 8'-7" A.F.F., SEE DETAIL IN THE NEXT GENERATION PROTOTYPE.
12. HVAC DUCTWORK SHALL BE INSTALLED AS HIGH AS POSSIBLE OR 1" BELOW SERVICE AREA CEILING/ SOFFIT CONSTR.
13. BOTTOM OF SUSPENDED LINEAR LED FIXTURES @9'-6" A.F.F. (FIXTURE P-1 AND P-2).
14. RACK LIGHT 'C' TO BE USED IN LIEU OF LIGHT FIXTURE 'A' WHEN ILLUMINATING ARTWORK WHERE CLG. ABOVE IS OPEN MOUNT @ 11'-0" A.F.F. (TYP.)
15. SPEAKERS LOCATED @ OPEN CLG. TO BE MOUNTED UNDER BOTTOM CHORD OF ROOF TRUSS.
16. FRONTLINE SOFFIT TO ALIGN WITH MILLWORK BELOW.
17. "R1" LIGHT FIXTURES ABOVE FRONTLINE SOFFIT TO ALIGN WITH "R1" LIGHT FIXTURES AT BACKLINE SOFFIT (TYP.)
18. ORANGE BEAM LIGHTING:
    UNDERSIDE OF BEAM - WHEN USING THE NATIONAL ACCOUNTS PREFABRICATED ORANGE BEAM LED-13 SHALL BE PROVIDED BY THE VENDOR FOR THE UNDERSIDE OF THE BEAM; WHEN THE ORANGE BEAM IS FIELD FRAMED LED-2 SHALL BE PROVIDED BY THE G.C. AND USED ON THE UNDERSIDE OF THE BEAM. TOP OF BEAM - WHEN USING THE NATIONAL ACCOUNTS PREFABRICATED ORANGE BEAM LED-13 SHALL BE PROVIDED BY THE VENDOR FOR THE TOP OF THE BEAM; WHEN THE ORANGE BEAM IS FIELD FRAMED LED-12 SHALL BE PROVIDED BY THE G.C. AND USED ON TOP OF THE BEAM.
19. SOUND ATTENUATING PANELS FOR OPEN CEILING ONLY. REFER TO MASTER FINISH SCHEDULE , NATIONAL ACCOUNTS & DUNKIN EXTRANET FOR ADDITIONAL INFORMATION

CEILING LEGEND:

R2 — 2x2 LAY-IN LED TROFFER LIGHT FIXTURE	EMERGENCY LIGHT REMOTE HEAD
R5 — 2x4 LAY-IN LED LIGHT FIXTURE W/ LENS	SPEAKER
R6 — 2x2 LAY-IN LED LIGHT FIXTURE W/ LENS	GYPSUM BOARD CEILING
R7 — 2x4 LAY-IN LED TROFFER LIGHT FIXTURE	2"X2" CEILING GRID SYSTEM
R1 — LED RECESSED LIGHT FIXTURE	2"X4" CEILING GRID SYSTEM
C — TRACK LIGHT	M — WALL-MTD OCCUPANCY SENSOR
R4 — ORANGE LIGHT BAR FIXTURE	RETURN/CEILING EXHAUST REGISTER
R4a — PINK LIGHT BAR FIXTURE	SUPPLY AIR DIFFUSER - 4 WAY
P1 / P2 — SUSPENDED LINEAR LED FIXTURE	FLUE
LED-12/ LED-13/ LED-14 — EXTERIOR LED TAPE LIGHT	ACCESS HATCH
LED-2 — EXTERIOR RECESSED LIGHT FIXTURE	ORDER STATUS BOARD/ EXPEDITOR VDU
A — WALL WASH FIXTURE	EWS-1 — WALL PACK
EBU — WALL MTD EMERG LIGHT	G — WALL PACK #2
EX1 — WALL MTD EMERG LIGHT/ EXIT SIGN COMBO	WSCX-2 — EXTERIOR WALL MOUNT LIGHT

NOTE: SEE ELECTRICAL DWG'S FOR MORE INFORMATION ON LIGHT FIXTURES.

LIGHTING SCHEDULE - VILLA LIGHTING

CODE	DESCRIPTION	MANUFACTURER	PRODUCT
A	WALL-WASH FIXTURE- TO BE USED AT ARTWORK AND LROD SIGN	CONTECH	RL20SA3-35K-12-D/ CTR2002CLR-P
B	PROVIDED BY WALK-IN BOX MANUF.	VARIES	VARIES
C	TRACK LIGHT & HEAD- USED @ WALL W/ ART WORK AND WHERE CEILING IS OPEN	JUNO	R600L-35K-BL
EBU-W	ULTRA COMPACT LED EMERGENCY UNIT (WHITE)	EXITRONIX	EBU-W-LED-51-52
EBU-B	ULTRA COMPACT LED EMERGENCY UNIT- USED ON WT-02 WALL ONLY (BLACK)	EXITRONIX	EBU-BL-LED-51-52
EMR	EXTERIOR COMBO LED REMOTE EXIST LIGHT HEAD- USED ABOVE OR ADJACENT TO EXIT DOORS (GRAY)	EXITRONIX	MLED-2-G-WP
EWS-1	WALL PACK (GRAY) EXTERIOR- USED ON DARK WALL FINSIH	WAC	WP-LED227-30-AGH
EWS-2	WALL PACK (WHITE) EXTERIOR- USED ON LIGHT WALL FINISH	WAC	WP-LED227-30-AWT
G	WALL PACK - ABOVE SERVICE DOOR	COOPER	XTOR3A
EX1	COMBO LED EXIT SIGN W/ LIGHT HEADS (WHITE)	EXITRONIX	VLED-U-WH-EL90
BL	BATHROOM SCONCE	LUMENCIA	LLW260D3K-SN
LED 2	EXTERIOR RECESSED LIGHT FIXTURE- USED UNDER ORANGE BEAM CANOPY	LUMARK	XTOR2B-W
LED 11	NOT USED		
LED 12	EXTERIOR LIGHT FIXTURE- USED ON TOP OF CHARCOAL TRIM AND FIELD FRAMED ORANGE BEAM	SOLID STATE LUMINARIES SOLUTIONS OF LIGHTING	SSL-LSSL-5165-400 LUMENS
LED 13	EXTERIOR LIGHT FIXTURE- USED ON TOP OF AND ON THE UNDERSIDE OF THE ORANGE BEAM WHEN USING THE PREFAB		TO BE PROVIDED BY PREFAB ORANGE BEAM VENDOR
LED 14	EXTERIOR LIGHT FIXTURE - ACCENT LIGHT USED ON TOP OF CHARCOAL TRIM AT BASE OF MONOLITH ONLY	LED POWER	HB308-48"-41K-15D-AC
OC	WALL MOUNTED OCCUPANCY SENSOR	WATTSTOPPER	WS-250-W
P1	8' SUSPENDED LINEAR LIGHT FIXTURE- USED IN SEATING/ SALES AREA	TEXAS FLUORESCENTS	SES-FR-96L-S62W6200L-DMV-35K-BK
P2	4' SUSPENDED LINEAR LIGHT FIXTURE- USED IN SEATING/ SALES AREA	TEXAS FLUORESCENTS	SES-FR-48L-S62W3100L-DMV-35K-BK
P3	PENDANT CHANDELIER- USED ABOVE COMMUNITY TABLE	TECH LIGHTING	700TD-ALVPMC-OS-LED930
PKL3	PARKING LOT LIGHTING	COOPER LIGHTING	LUMARK PRV-PREVAIL PRV-A40-UNV-T3-SA-BZ
PKL4	PARKING LOT LIGHTING	COOPER LIGHTING	LUMARK PRV-PREVAIL PRV-A40-UNV-T4-SA-BZ
R1	RECESSED LED LIGHT FIXTURE	CREE	RC6/CR6T-1600L-35K
R2	2X2 LAY-IN TROFFER LED LIGHT FIXTURE, USED IN FRONT OF	CREE	CR22-32L-35K-S-HD
R3	4" LED ADJ DOWNLIGHT, 400K, 200 LUMEN	NORA	NCH-436-L20-40-D-SF
R4	ORANGE LED LINEAR LIGHT BAR- USED ABOVE FRONT LINE [NOTE: AVAILABLE IN INCREMENTS OF 1FT WITH A 1FTx1FT CORNER	PINNACLE ARCHITECTURAL LIGHTING	EX3D-A-N-835VHO-8-S/AC120ST
R4a(4)	PINK LED LINEAR LIGHT BAR- USED ABOVE BASKIN DIPPING CABINET	PINNACLE ARCHITECTURAL LIGHTING	EX3D-A-35VHO-4'-AC48JB-120-1C-CC
R4a(8)	PINK LED LINEAR LIGHT BAR- USED ABOVE BASKIN DIPPING CABINET	PINNACLE ARCHITECTURAL LIGHTING	EX3D-A-35VHO-8'-AC48JB-120-1C-CC
R5	2X4 LAY-IN LED LIGHT FIXTURE, USED IN BACK OF HOUSE	LSI	SFP24-LED-50-UE-DIM-35-U
R6	2X2 LAY-IN LED LIGHT FIXTURE, USED OVER SERVICE AREA - REMODELS ONLY	LSI	SFP22-LED-UE-30-DIM-35-U
R7	2X4 LAY-IN TROFFER LED LIGHT FIXTURE, USED IN FRONT OF HOUSE - REMODELS ONLY	CREE	CR24-40L-35K-S-HD
WSCX-2	EXTERIOR SIGN LIGHT FIXTURE - USED AT ACCENT PANELS	H-LITE MFG INC.	H-HDMR16/18-1-119/ MR16AD1C293010T-10-S1

LIGHTING SCHEDULE NOTES

1. PROVIDE ALL FIXTURES COMPLETE WITH LAMPS. REF. NATIONAL ACCOUNT SOURCE INFO FOR LAMP SPECS & VILLA LIGHTING RE-LAMPING PROGRAM.
2. ALL BALLASTS SHALL BE HIGH POWER FACTOR.
3. PROVIDE HOLD-DOWN CLIPS FOR EACH CORNER OF FLUORESCENT GRID TROFFERS.
4. COORDINATE AND VERIFY ALL FIXTURE INFORMATION, TYPES AND FINAL LOCATIONS WITH THE REFLECTED CEILING PLAN.
5. LAMPS SHALL BE AS MANUFACTURED BY SYLVANIA, WESTINGHOUSE, GENERAL ELECTRIC OR APPROVED EQUAL.

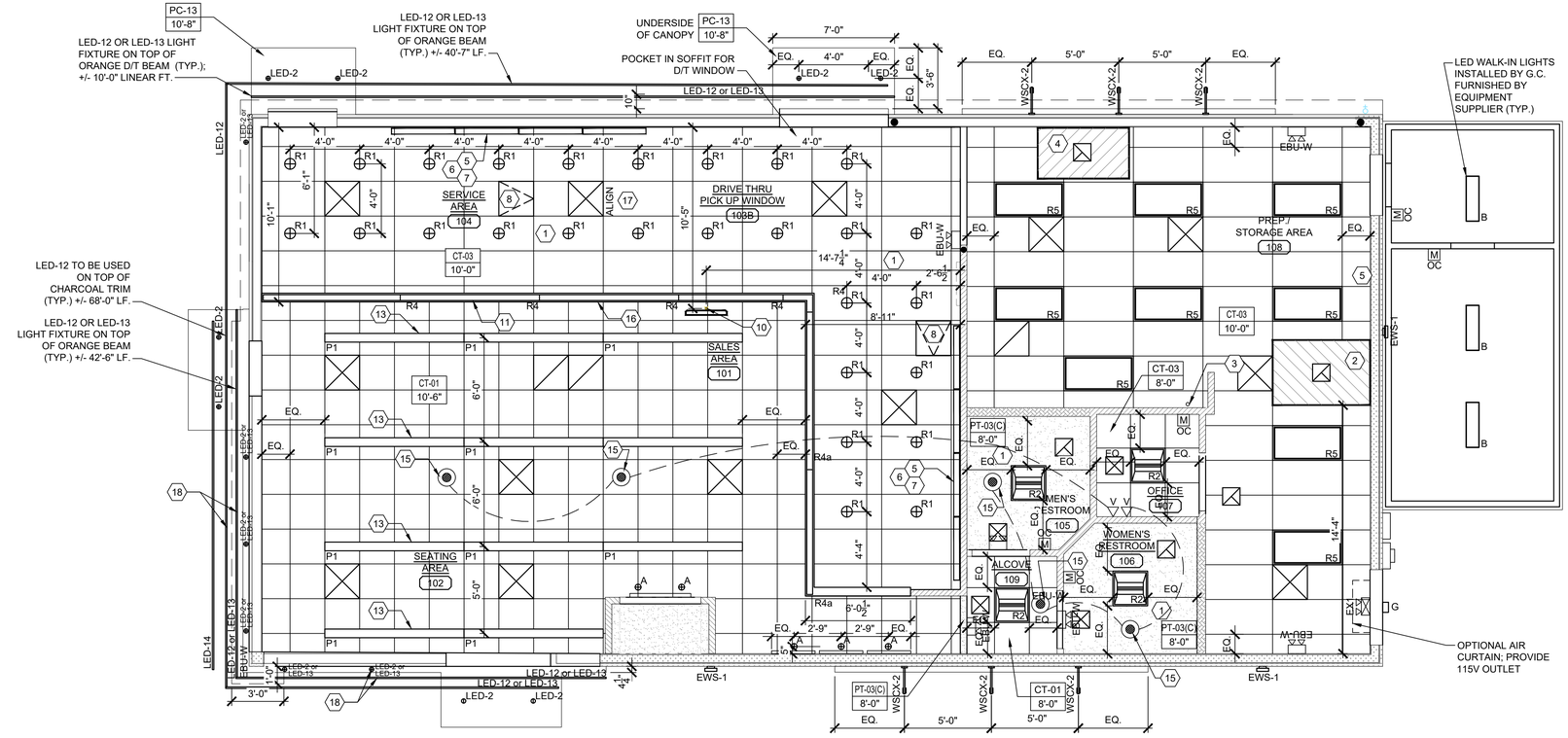

1 REFLECTED CEILING PLAN
SCALE: 1/4" = 1'-0"

dunkin' brands
E+H ARCHITECTS, P.C.
750 OLD HICKORY BLVD., SUITE 270
BRENTWOOD, TN 37027
p615.377.3111
www.EandHArch.com

NO	DESCRIPTION	DATE
	REVISIONS	

1402 WESTERN BOULEVARD
TARBORO, NORTH CAROLINA
RENOVATION
REFLECTED CEILING PLAN
P C # 365111

NORTH CAROLINA REGISTERED SEAL 16017 ARCHITECT ROY A. WILLIAMS 10/20/23

A1.3

PERMIT ISSUE DATE: 10-20-2023

NOTE: DRAWINGS ARE NOT TO SCALE IF SHEET IS PLOTTED ON 11" x 17"

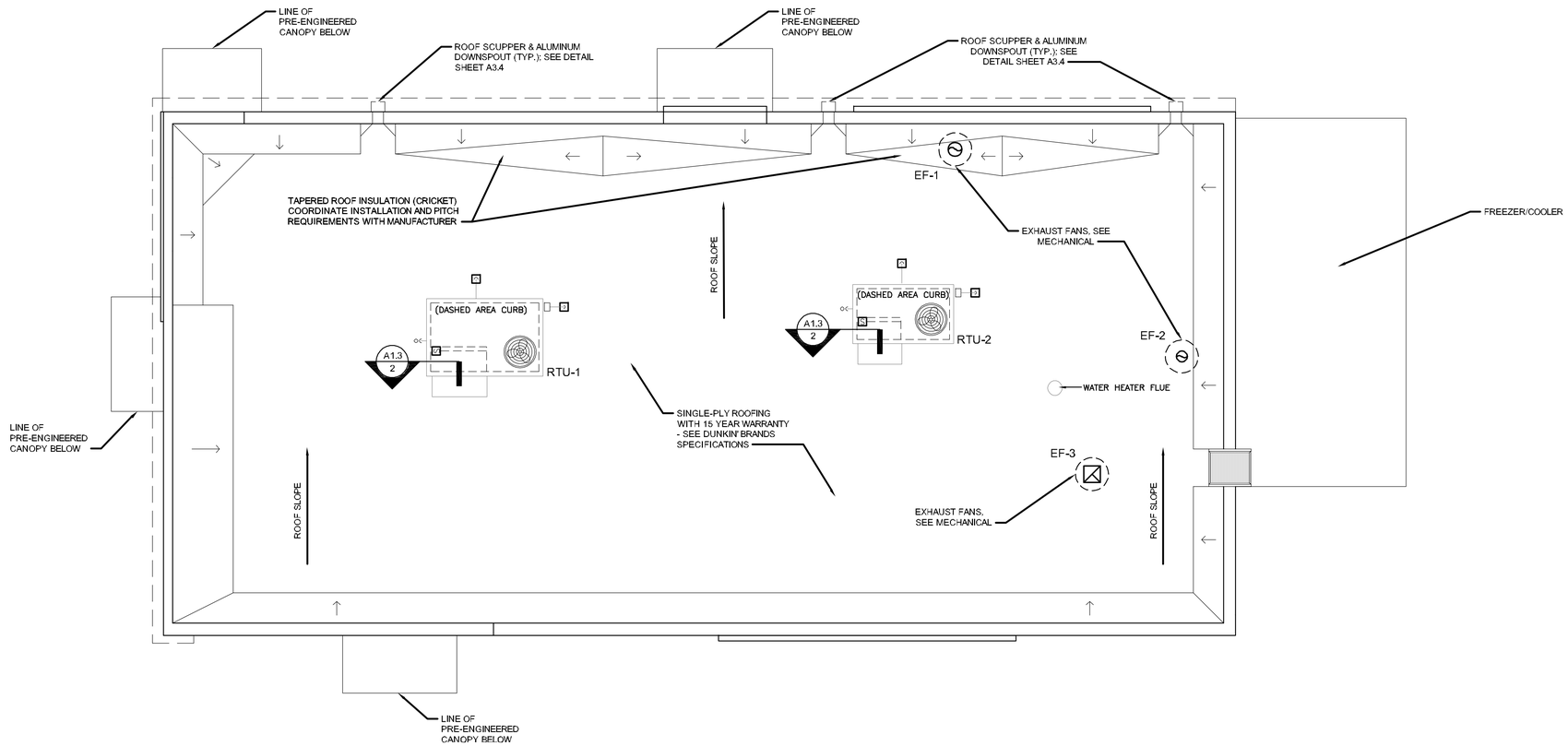

1 ROOF PLAN
SCALE: 1/4" = 1'-0"

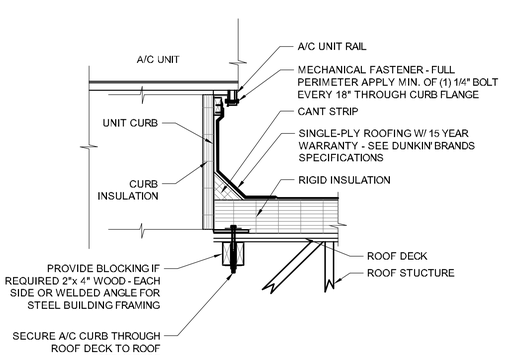

2 DETAIL AT CURB
1/2" = 1'-0" NOTE:

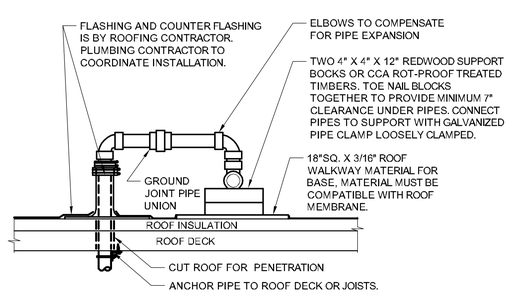

NOTES:

1. REFER TO PLANS FOR PIPE SIZE(S) AND LOCATION(S). USE WELDED OR SCREWED FITTINGS AS SPECIFIED FOR PIPE SIZE. LOCATE PENETRATION MINIMUM 18" FROM ADJACENT WALLS, EQUIPMENT CURBS, PARAPETS, EXPANSION JOINTS, ETCETERA.
2. LOCATE SUPPORTS AT THE FOLLOWING SPACING: 1-1/2"=9', 1-1/4"=8', 1"=7' & 3/4"=6'. PROVIDE SUPPORTS AS CLOSE AS POSSIBLE TO EACH ELBOW AND TEE.

3 ROOF PENETRATION
NTS NOTE:

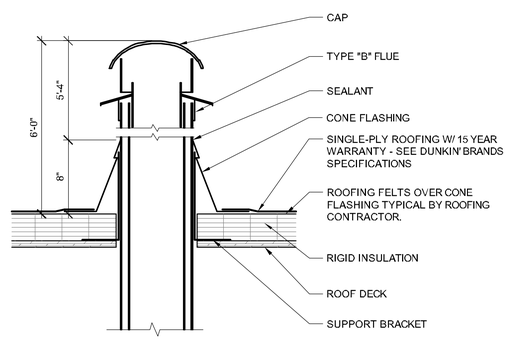

4 EXHAUST PIPE PENETRATION
NTS NOTE:

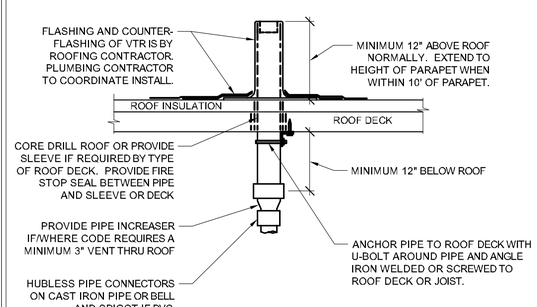

NOTE:

REFER TO PLANS FOR VTR PIPE SIZES AND LOCATIONS. LOCATE VTR MINIMUM THREE FEET FROM PROPERTY LINE, OR TEN FEET HORIZONTAL OR THREE FEET VERTICAL ABOVE ANY BUILDING OPENING OR FRESH AIR INTAKE, OR ONE FOOT FROM ANY VERTICAL SURFACE. LOCATE VTR MINIMUM 18" FROM PARAPET, EXPANSION JOINT, EQUIPMENT CURB, ETC. OFFSET IN CEILING SPACE WHERE REQUIRED TO MEET THESE CONDITIONS.

5 VENT THRU ROOF
NTS NOTE:

dunkin' brands

E+H ARCHITECTS, P.C.
750 OLD HICKORY BLVD., SUITE 150-2
BRENTWOOD, TN 37027
p(615.377.3111
www.EandHArch.com
ARCHITECTS

NO	DESCRIPTION	DATE
	REVISIONS	

1402 WESTERN BOULEVARD
TARBORO, NORTH CAROLINA

ROOF PLAN

P C # 365111

NORTH CAROLINA REGISTERED SEAL 16017 ARCHITECT ROY A. WILLIAMS 10/20/23

A1.4

PERMIT ISSUE DATE: 10-20-2023

EXTERIOR FINISH SCHEDULE

CODE	MATERIAL	MANUFACTURER	PRODUCT NO	DESCRIPTION/REMARKS
CS-1	CEMENTITIOUS PANEL	JAMES HARDIE	HARDIE PANEL "SMOOTH" 48" X 120"	JOINT DETAIL: FLUSH INSTALL PER MANUF REQUIREMENTS
CS-2	CEMENTITIOUS SIDING	JAMES HARDIE	WOOD PATTERN RUSTIC SERIES WOODTONE "25% SUMMER WHEAT" WOOD PATTERN	7 1/4" X 12' WITH 7" EXPOSURE SEE NATIONAL ACCOUNTS JEFF HARVEY 714-287-6278
MC-1	METAL COPING		PREFORMED METAL COPING	FINISH: CHARCOAL GREY
EIFS-1	EXTERIOR INSULATION AND FINISH SYSTEM	DRYVIT	MATCH SW 7063 "NEBULOUS WHITE"	SANDPEBBLE FINE FINISH
EIFS-2	EXTERIOR INSULATION AND FINISH SYSTEM	DRYVIT	MATCH SW7019 "GAUNTLET GRAY"	SANDPEBBLE FINE FINISH
EIFS-3	EXTERIOR INSULATION AND FINISH SYSTEM	DRYVIT	MATCH SW 7069 "IRON ORE"	SANDPEBBLE FINE FINISH
PTE-02	PAINT	SHERWIN WILLIAMS	CHARCOAL FINISH	SW 7069 "IRON ORE"
TR-01	METAL TRIM	TAMLYN	EXTRUDED METAL CHANNEL (PINK)	TAMLY XTREME TRIM IAN DANIELS 713-446-3075 idaniels@tamlyn.com
TR-02	METAL TRIM	TAMLYN	EXTRUDED METAL CHANNEL (OFF WHITE)	

NOTE: DRAWINGS ARE NOT TO SCALE IF SHEET IS PLOTTED ON 11" x 17"

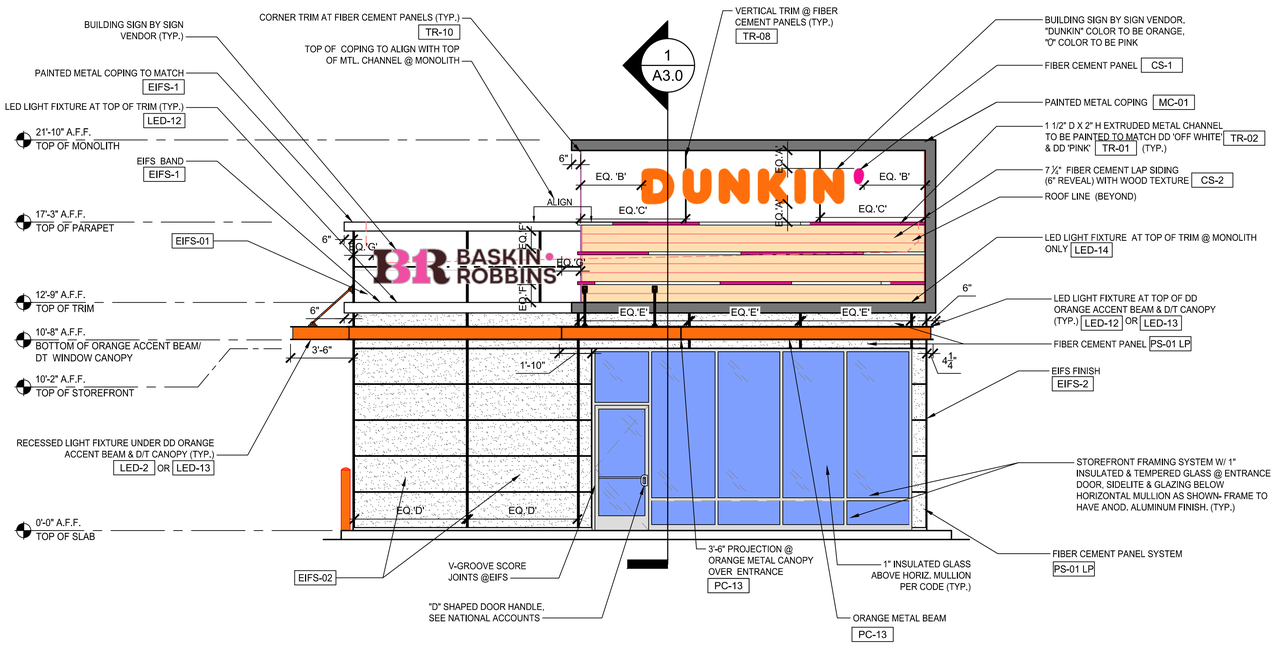

4 FRONT ELEVATION
SCALE: 1/4" = 1'-0"

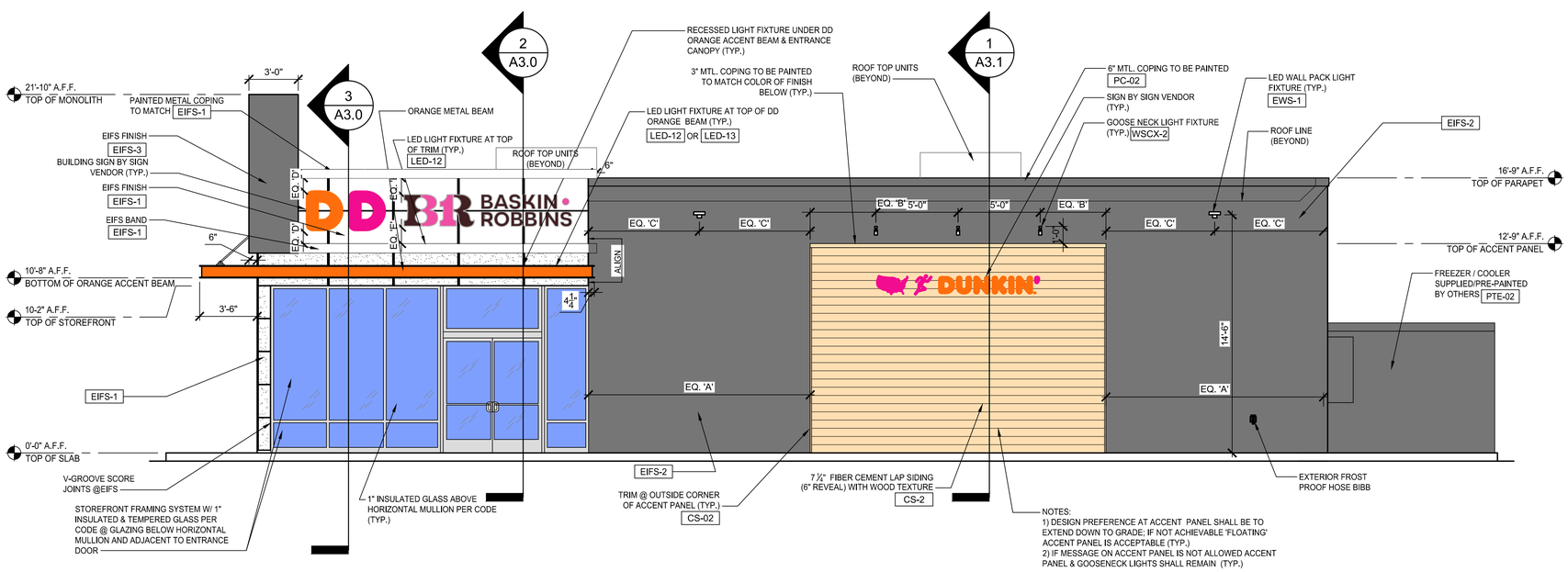

3 RIGHT ELEVATION
SCALE: 1/4" = 1'-0"

dunkin' brands

E+H ARCHITECTS, P.C.
750 OLD HICKORY BLVD., SUITE 150-2
BRENTWOOD, TN 37027
p615.377.3111
www.EandHArch.com

NO.	DESCRIPTION	DATE
	REVISIONS	

1402 WESTERN BOULEVARD
TARBORO, NORTH CAROLINA

EXTERIOR ELEVATIONS

P C # 365111

NORTH CAROLINA REGISTERED SEAL 16017 ARCHITECT ROY A. WILLIAMS

A2.0

PERMIT ISSUE DATE: 10-20-2023

NOTE: DRAWINGS ARE NOT TO SCALE IF SHEET IS PLOTTED ON 11" x 17"

EXTERIOR FINISH SCHEDULE

CODE	MATERIAL	MANUFACTURER	PRODUCT NO	DESCRIPTION/REMARKS
CS-1	CEMENTITIOUS PANEL	JAMES HARDIE	HARDIE PANEL "SMOOTH" 48" X 120"	JOINT DETAIL: FLUSH INSTALL PER MANUF REQUIREMENTS
CS-2	CEMENTITIOUS SIDING	JAMES HARDIE	WOOD PATTERN RUSTIC SERIES WOODTONE "25% SUMMER WHEAT" WOOD PATTERN	7 1/4" X 12' WITH 7" EXPOSURE SEE NATIONAL ACCOUNTS JEFF HARVEY 714-287-6278
MC-1	METAL COPING		PREFORMED METAL COPING	FINISH: CHARCOAL GREY
EIFS-1	EXTERIOR INSULATION AND FINISH SYSTEM	DRYVIT	MATCH SW 7063 "NEBULOUS WHITE"	SANDPEBBLE FINE FINISH
EIFS-2	EXTERIOR INSULATION AND FINISH SYSTEM	DRYVIT	MATCH SW7019 "GAUNTLET GRAY"	SANDPEBBLE FINE FINISH
EIFS-3	EXTERIOR INSULATION AND FINISH SYSTEM	DRYVIT	MATCH SW 7069 "IRON ORE"	SANDPEBBLE FINE FINISH
PTE-02	PAINT	SHERWIN WILLIAMS	CHARCOAL FINISH	SW 7069 "IRON ORE"
TR-01	METAL TRIM	TAMLYN	EXTRUDED METAL CHANNEL (PINK)	TAMLY XTREME TRIM IAN DANIELS 713-446-3075 idaniels@tamlyn.com
TR-02	METAL TRIM	TAMLYN	EXTRUDED METAL CHANNEL (OFF WHITE)	

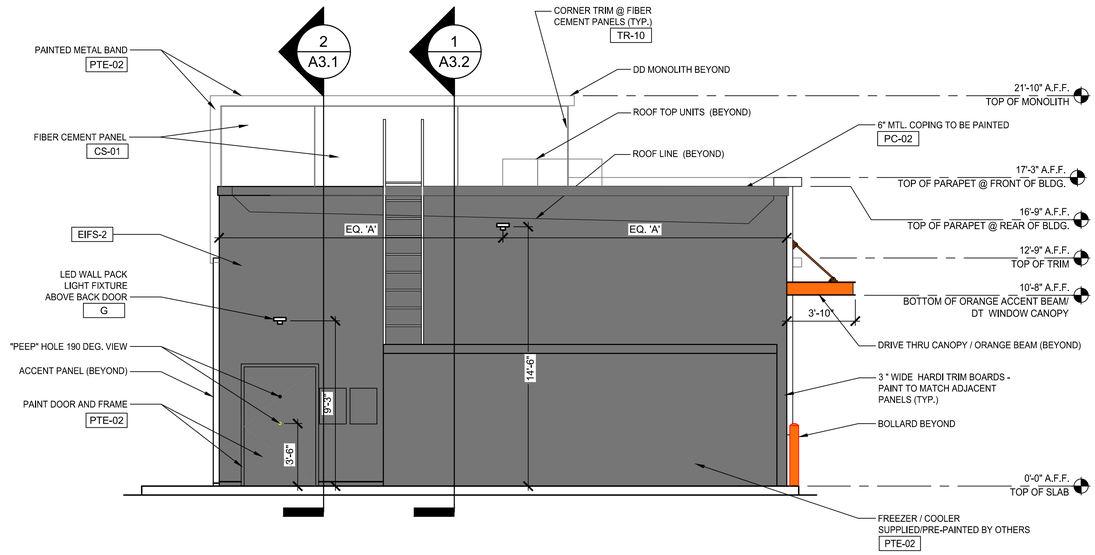

4 REAR ELEVATION
SCALE: 1/4" = 1'-0"

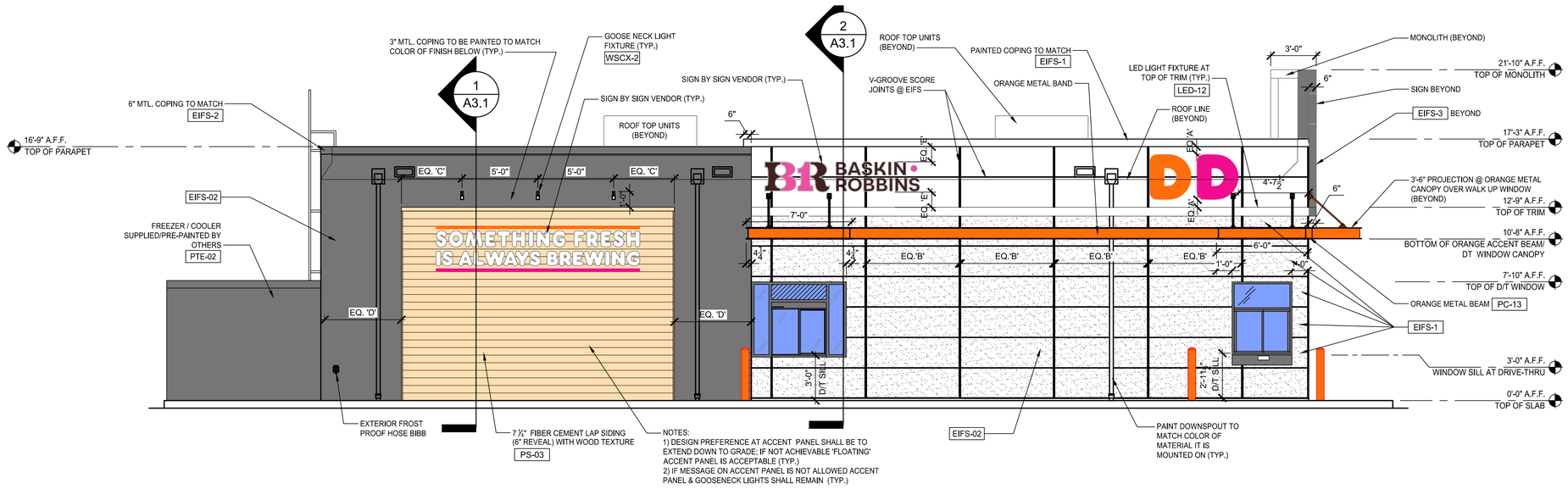

3 LEFT ELEVATION
SCALE: 1/4" = 1'-0"

dunkin' brands

E+H ARCHITECTS, P.C.
750 OLD HICKORY BLVD., SUITE 50-2
BRENTWOOD, TN 37027
p615.377.3111
www.EandHArch.com

NO	DESCRIPTION	DATE
	REVISIONS	

1402 WESTERN BOULEVARD
TARBORO, NORTH CAROLINA

EXTERIOR ELEVATIONS

P C # 365111

NORTH CAROLINA REGISTERED SEAL 16017 ARCHITECT ROY A. WILLIAMS

A2.1

PERMIT ISSUE DATE: 10-20-2023

NOTE: DRAWINGS ARE NOT TO SCALE IF SHEET IS PLOTTED ON 11" x 17"

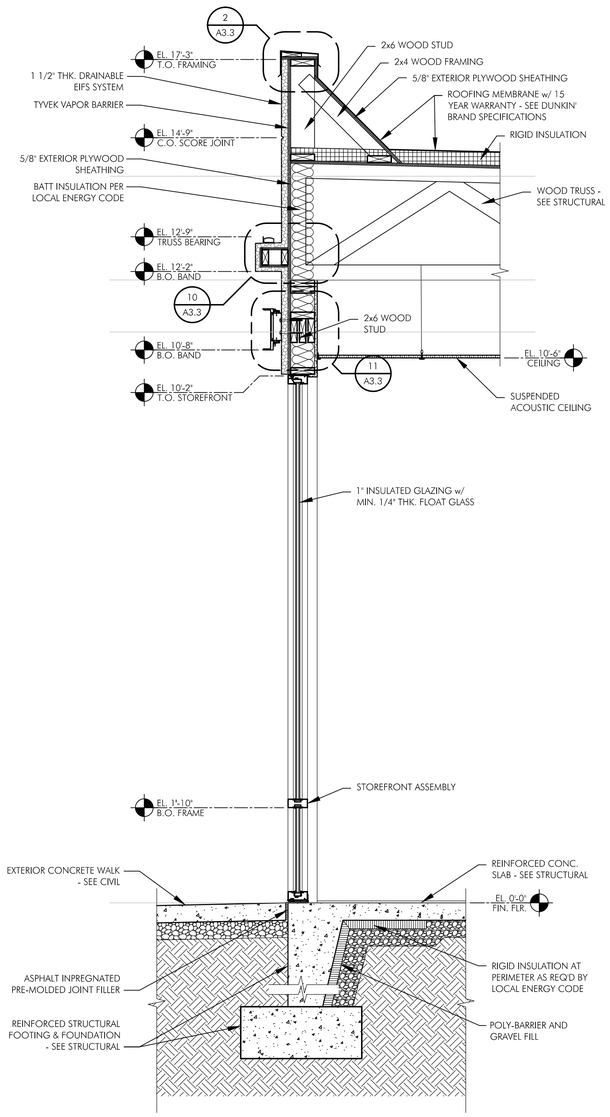

3 WALL SECTION

3/4" = 1'-0" NOTE:

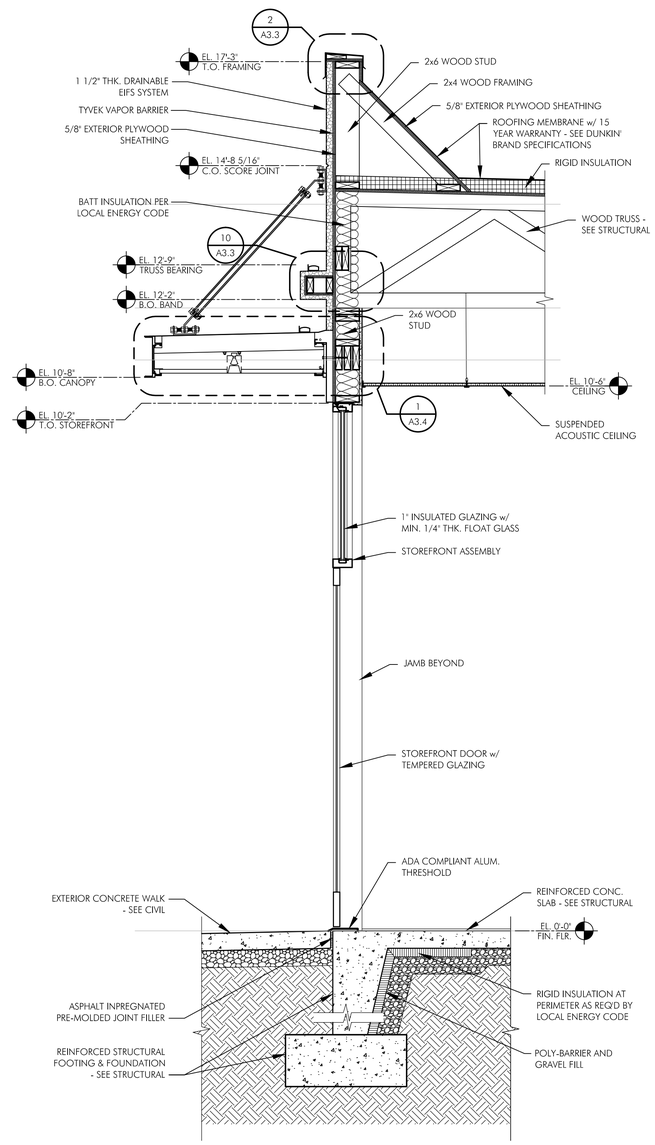

2 WALL SECTION

3/4" = 1'-0" NOTE:

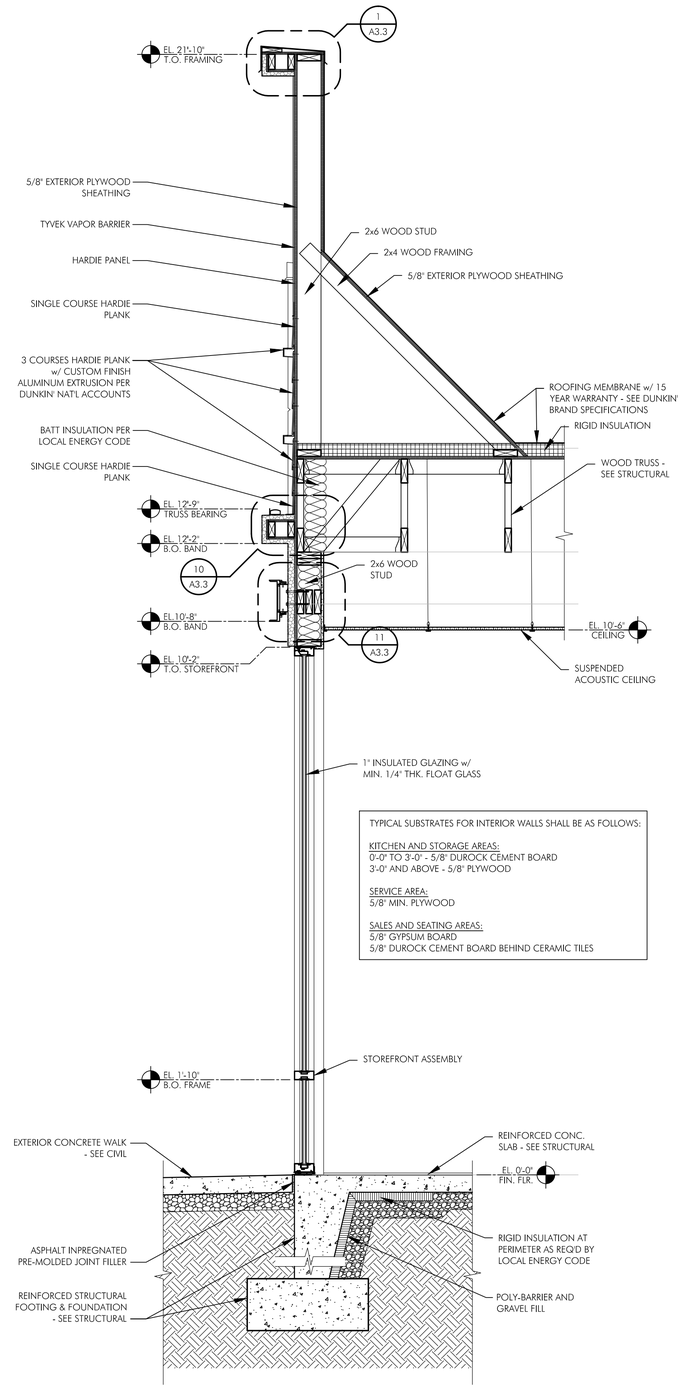

TYPICAL SUBSTRATES FOR INTERIOR WALLS SHALL BE AS FOLLOWS:

KITCHEN AND STORAGE AREAS:
0'-0" TO 3'-0" - 5/8" DUROCK CEMENT BOARD
3'-0" AND ABOVE - 5/8" PLYWOOD

SERVICE AREA:
5/8" MIN. PLYWOOD

SALES AND SEATING AREAS:
5/8" GYPSUM BOARD
5/8" DUROCK CEMENT BOARD BEHIND CERAMIC TILES

1 WALL SECTION

3/4" = 1'-0" NOTE:

dunkin' brands

E+H ARCHITECTS, P.C.
750 OLD HICKORY BLVD., SUITE 150-2
BRENTWOOD, TN 37027
p|615.377.3111
www.EandHArch.com

NO	DESCRIPTION	DATE

REVISIONS

1402 WESTERN BOULEVARD
TARBORO, NORTH CAROLINA

WALL SECTIONS

P C # 3 6 5 1 1 1

NORTH CAROLINA REGISTERED SEAL 16017 ARCHITECT ROY A. WILLIAMS 10/20/23

A3.0

PERMIT ISSUE DATE: 10.20.2023

NOTE: DRAWINGS ARE NOT TO SCALE IF SHEET IS PLOTTED ON 11" x 17"

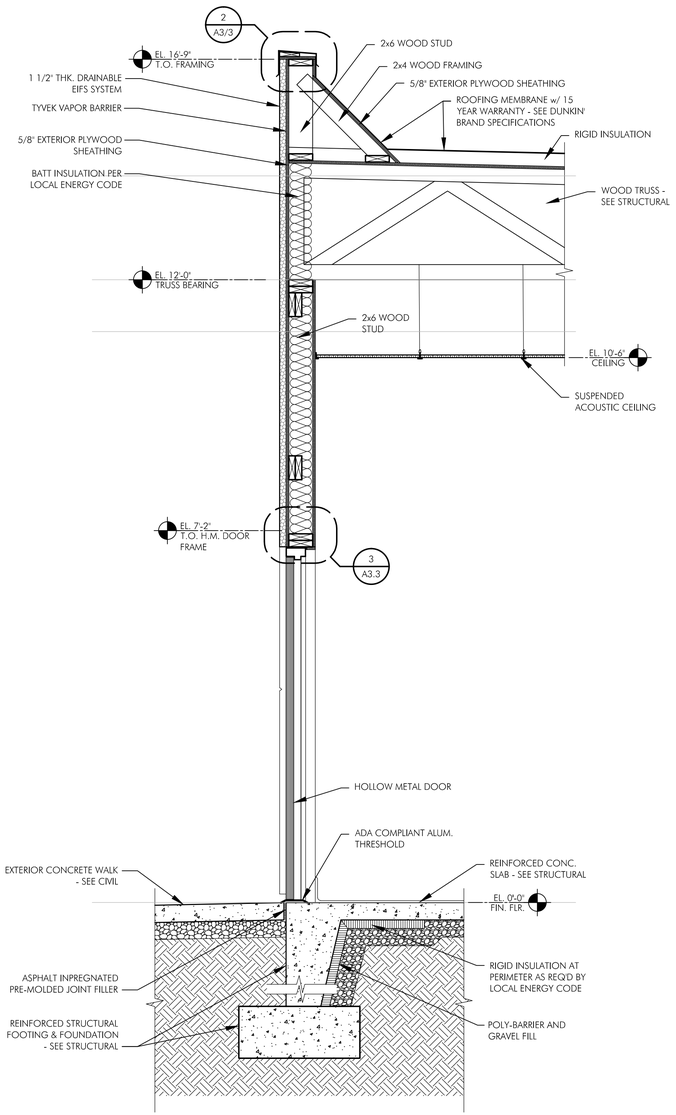

2 WALL SECTION

3/4" = 1'-0" NOTE:

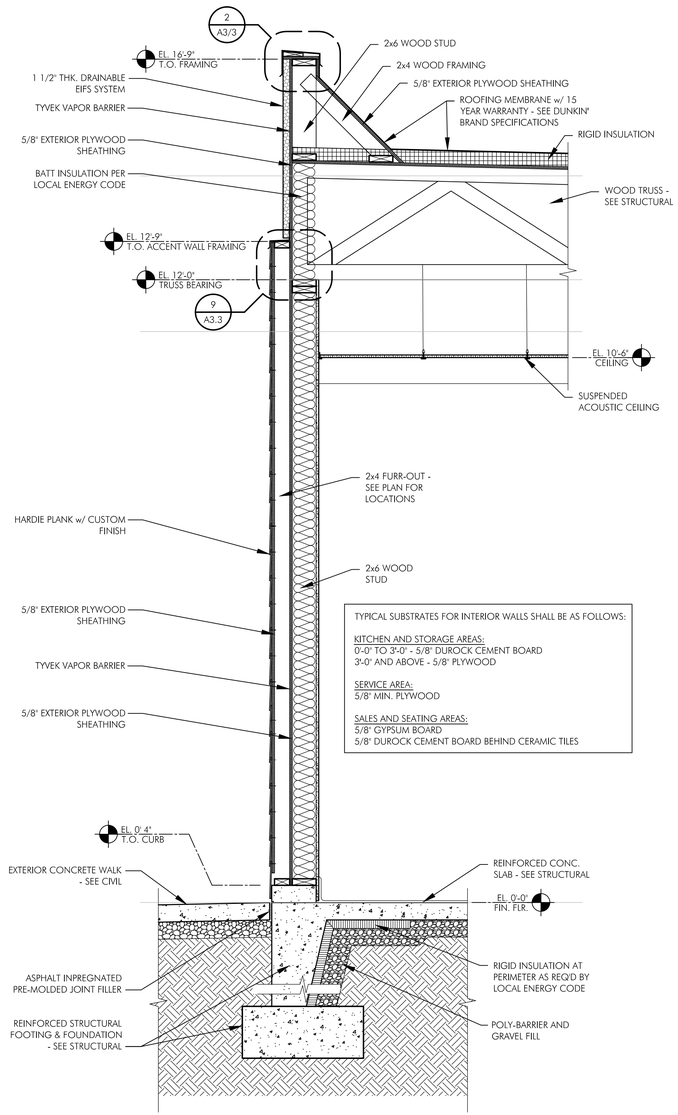

1 WALL SECTION

3/4" = 1'-0" NOTE:

dunkin' brands

E+H ARCHITECTS, P.C.
750 OLD HICKORY BLVD.,
SUITE 150-2
BRENTWOOD, TN 37027
p|615.377.3111
www.EandHArch.com

NO	DESCRIPTION	DATE
	REVISIONS	

1402 WESTERN BOULEVARD
TARBORO, NORTH CAROLINA

WALL SECTIONS

P C # 365111

NORTH CAROLINA REGISTERED SEAL 16017 ARCHITECT ROY A. WILLIAMS 10/20/23

A3.1

PERMIT ISSUE DATE: 10-20-2023

NOTE: DRAWINGS ARE NOT TO SCALE IF SHEET IS PLOTTED ON 11" x 17"

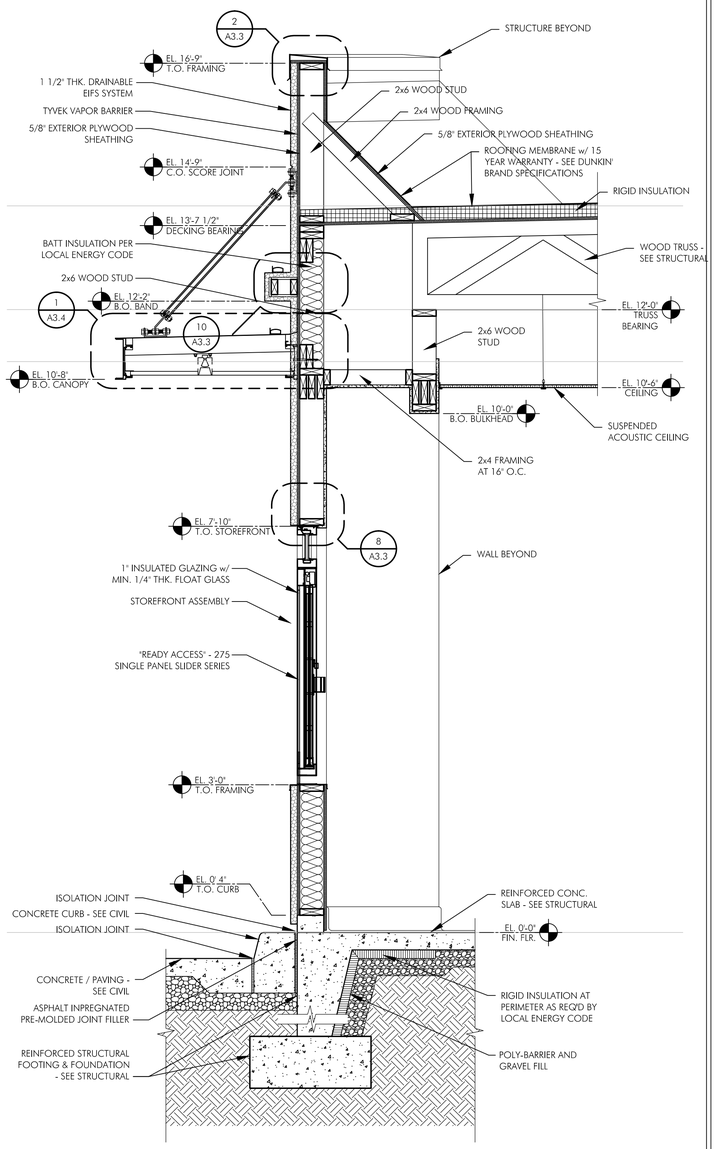

2 WALL SECTION

3/4" = 1'-0" NOTE:

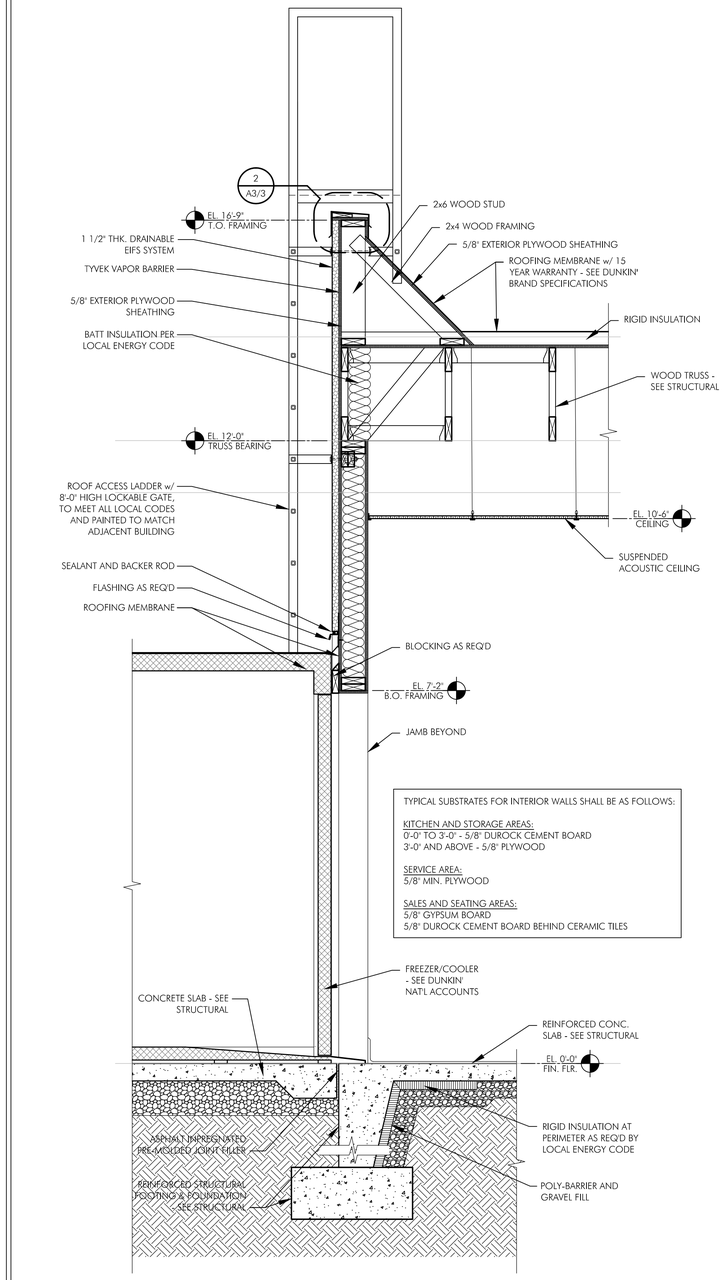

1 WALL SECTION

3/4" = 1'-0" NOTE:

dunkin' brands

E + H ARCHITECTS, P.C.
750 OLD HICKORY BLVD.,
SUITE 150 - 2
BRENTWOOD, TN 37027
p|615.377.3111
www.EandHArch.com

NO	DESCRIPTION	DATE

REVISIONS

1402 WESTERN BOULEVARD
TARBORO, NORTH CAROLINA

WALL SECTIONS

P C # 365111

NORTH CAROLINA REGISTERED SEAL 16017 ARCHITECT ROY A. WILLIAMS 10/20/23

A3.2

PERMIT ISSUE DATE: 10-20-2023

NOTE: DRAWINGS ARE NOT TO SCALE IF SHEET IS PLOTTED ON 11" x 17"

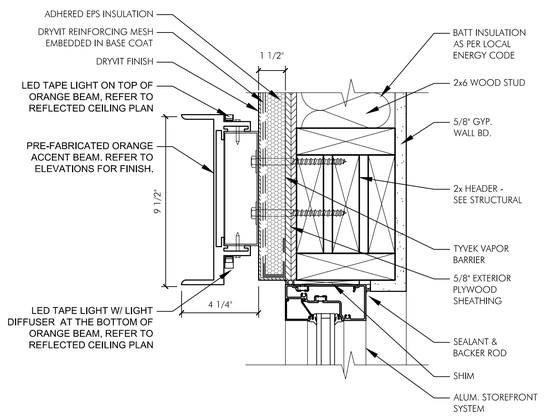

11 WINDOW HEAD / ORANGE BEAM DETAIL

3" = 1'-0" NOTE:

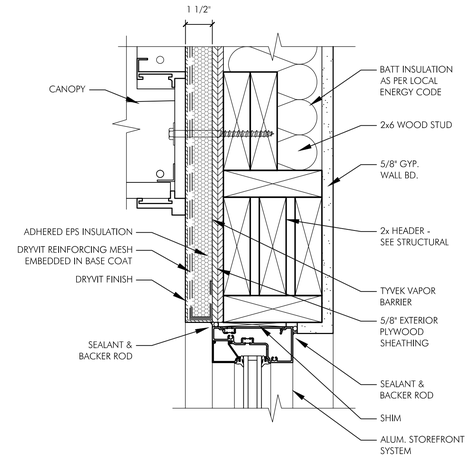

8 WINDOW HEAD / CANOPY ATTACHMENT

3" = 1'-0" NOTE:

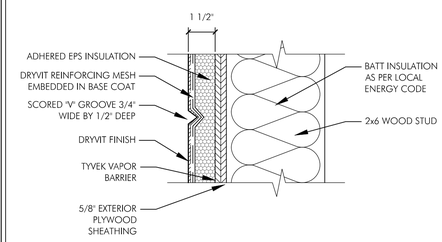

5 EIFS SCORE JOINT

3" = 1'-0" NOTE:

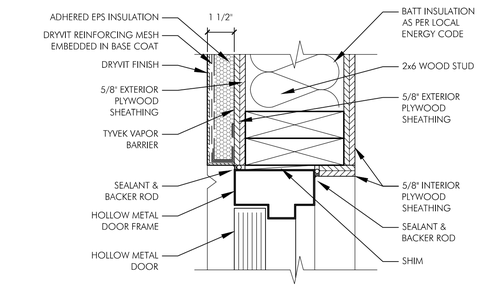

3 DOOR HEAD DETAIL

3" = 1'-0" NOTE:

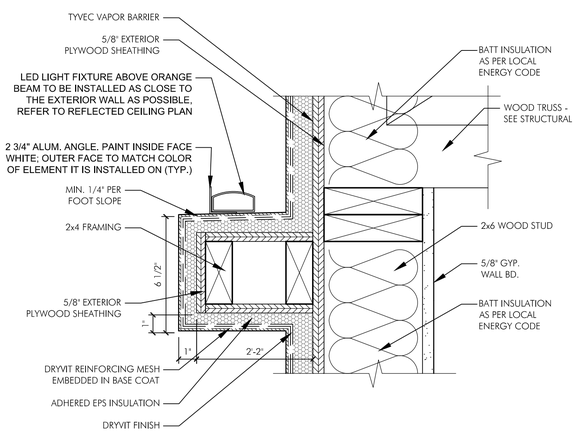

10 EIFS BAND DETAIL

3" = 1'-0" NOTE:

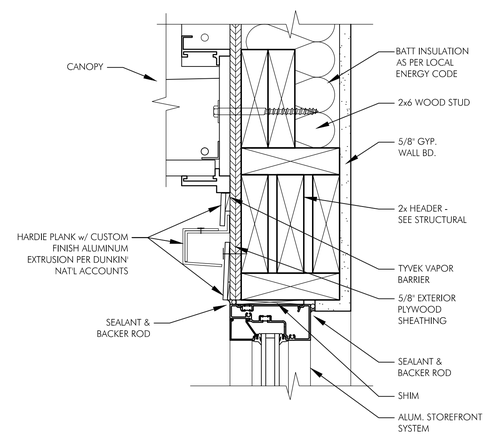

7 WINDOW HEAD / CANOPY ATTACHMENT

3" = 1'-0" NOTE:

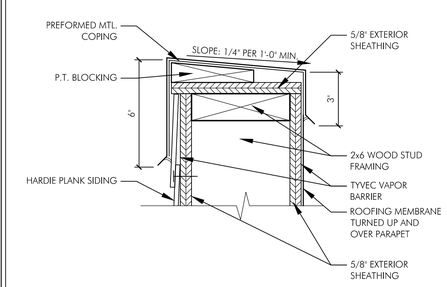

4 PARAPET CAP DETAIL

3" = 1'-0" NOTE:

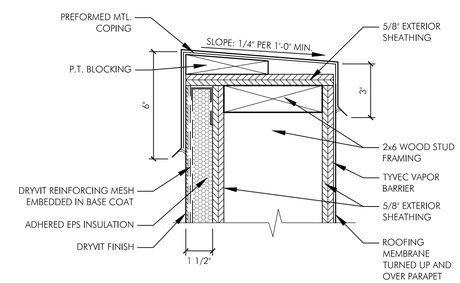

2 PARAPET CAP DETAIL

3" = 1'-0" NOTE:

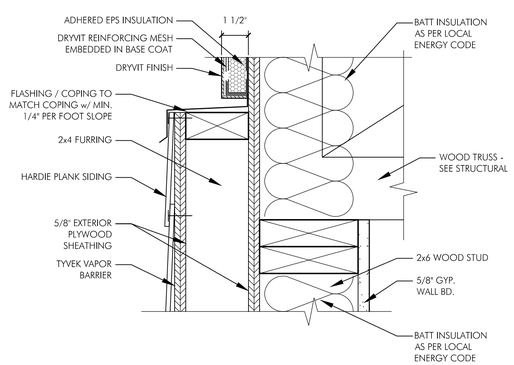

9 FURR OUT DETAIL

3" = 1'-0" NOTE:

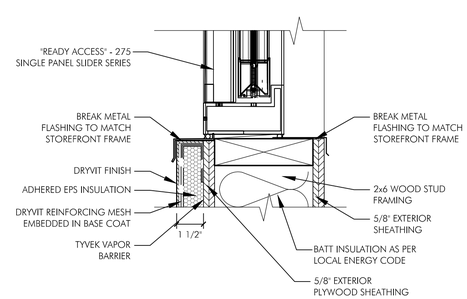

6 DRIVE THRU WINDOW SILL

3" = 1'-0" NOTE:

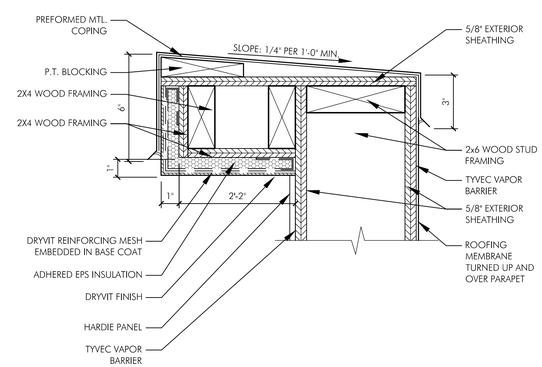

1 PARAPET CAP DETAIL

3" = 1'-0" NOTE:

dunkin' brands

E + H ARCHITECTS, P.C.
750 OLD HICKORY BLVD., SUITE 150-2
BRENTWOOD, TN 37027
p|615.377.3111
www.EandHArch.com

NO	DESCRIPTION	DATE
	REVISIONS	

1402 WESTERN BOULEVARD
TARBORO, NORTH CAROLINA

DETAILS

P C # 365111

NORTH CAROLINA REGISTERED SEAL 16017 ARCHITECT ROY A. WILLIAMS

A3.3

PERMIT ISSUE DATE: 10-20-2023

NOTE: DRAWINGS ARE NOT TO SCALE IF SHEET IS PLOTTED ON 11" x 17"

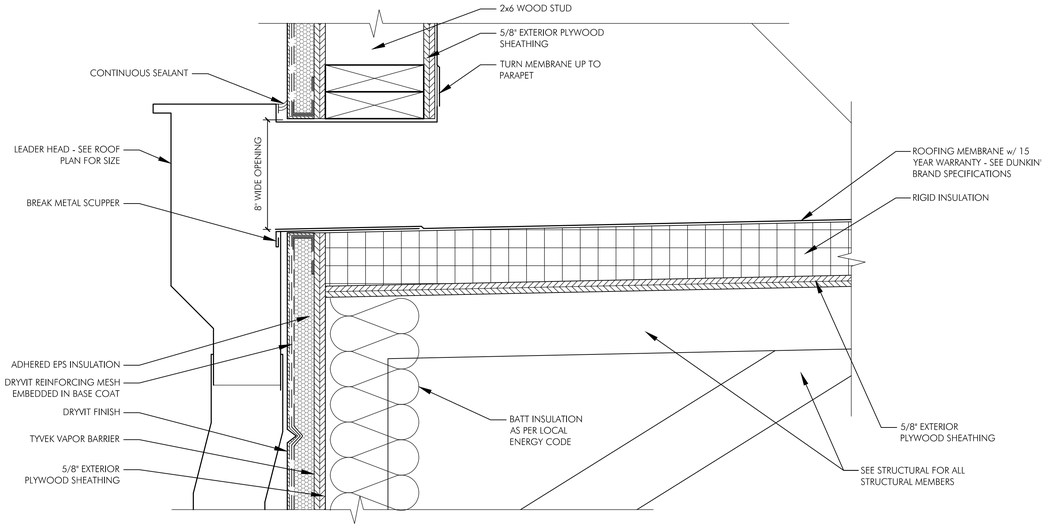

3 SCUPPER DETAIL

3" = 1'-0" NOTE:

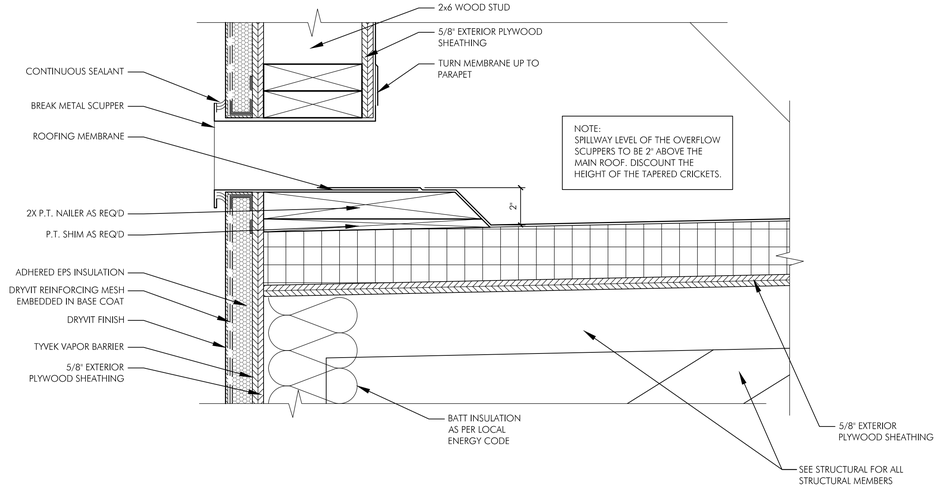

2 OVERFLOW SCUPPER DETAIL

3" = 1'-0" NOTE:

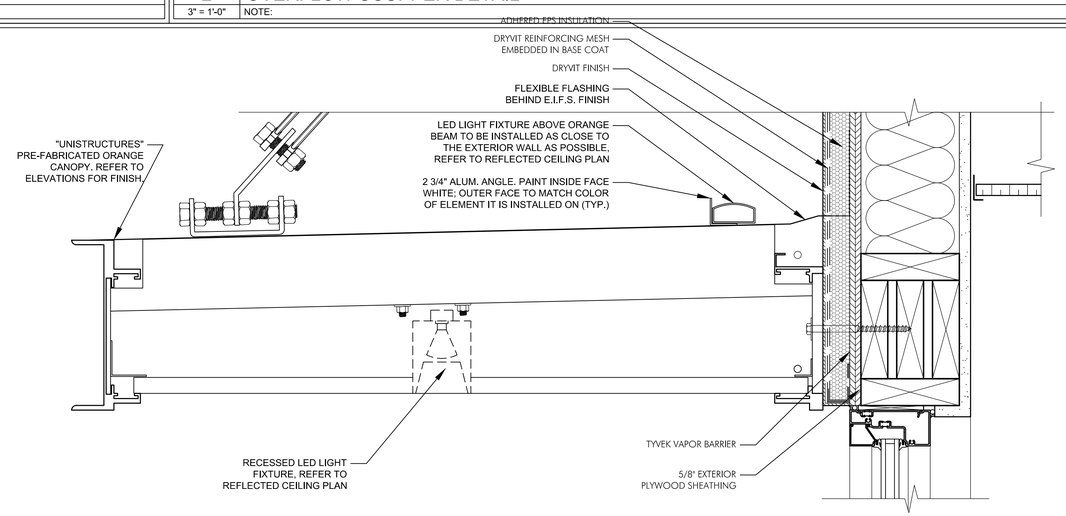

1 CANOPY DETAIL

3" = 1'-0" NOTE:

dunkin' brands

E + H ARCHITECTS, P.C.
750 OLD HICKORY BLVD., SUITE 150-2
BRENTWOOD, TN 37027
p|615.377.3111
www.EandHArch.com

NO	DESCRIPTION	DATE
	REVISIONS	

1402 WESTERN BOULEVARD
TARBORO, NORTH CAROLINA

DETAILS

P C # 365111

NORTH CAROLINA REGISTERED SEAL 16017 ARCHITECT ROY A. WILLIAMS 10/20/23

A3.4

PERMIT ISSUE DATE: 10-20-2023

NOTE: DRAWINGS ARE NOT TO SCALE IF SHEET IS PLOTTED ON 11" x 17"

INTERIOR FINISH MATERIAL SCHEDULE

CODE	MATERIAL	MANUFACTURER	PRODUCT #	DESCRIPTION
FT-1	GENERAL FLOOR TILE	DAL-TILE	PF05 "ASH GREY STD"	12"X24" - PUBLIC AREAS USE WITH GROUT G-01
FTB-1	FLOOR TILE BASE	DAL-TILE	PF05 "ASH GREY STD"	CUT TILE TO 6" HIGH, INSTALL WITH BRUSHED NICKEL SCHLUTER STRIP CAP JOLLY-ANIGB
FT-2	BACK OF HOUSE QUARRY TILE	DAL-TILE	"ASHEN GREY STD"	6"X6" - EMPLOYEE AREAS USE WITH GROUT G-02
FTB-2	FLOOR TILE BASE	DAL-TILE	"ASHEN GREY STD"	5"X6" COVE BASE
WT-1	"SWITCH" WALL TILE	DAL-TILE	COOL SWITCH TILE N51812241P2	12"X24" - STACK BOND USE WITH GROUT G-03
WT-2	ACCENT WALL TILE	DAL-TILE	PORTFOLIO SERIES PF09 "CHARCOAL"	6"X24" - STACK BOND USE WITH GROUT G-04
WT-3	WASH ROOM FIELD WALL TILE	DAL-TILE	"WHITE" N5166181P2 MATTE FINISH	6"X18" USE WITH GROUT G-05
WT-4	WASH ROOM ACCENT WALL TILE	DAL-TILE	'BLOCK PARTY' SERIES N515661P2	6"X6" STACK BOND (TILE FACE PATTERN IS RANDOM) USE WITH GROUT G-05
WT-5	CAKERY WALL	DAL-TILE	AR09 COLUMN GRAY	ARTICULO 6"X18" WALL TILE
PT-1	PAINT	SHERWIN WILLIAMS	"ON THE ROCKS" SW7671	SATIN/EGGSHELL FINISH FOR WALLS
PT-2	PAINT	SHERWIN WILLIAMS	"IRON ORE" SW7069	SEMI-GLOOS FINISH FOR DOORS /TRIM
PT-3	PAINT	SHERWIN WILLIAMS	"ICE CUBE" SW6252	FLAT FOR CEILINGS
FRP-1	FRP WALL PANEL	CRANE COMPOSITES	"GLASBOARD" SERIES "PEARL GREY"	EMBOSSED PEBBLE FINISH
G-01	GROUT	MAPEI	UPTRACOLOR PLUS FA #107 "IRON"	
G-02	GROUT	MAPEI	UPTRACOLOR PLUS FA #47 "CHARCOAL"	
G-03	GROUT	MAPEI	UPTRACOLOR PLUS FA #38 "AVALANCHE"	
G-04	GROUT	MAPEI	UPTRACOLOR PLUS FA #10 "BLACK"	
G-05	GROUT	MAPEI	UPTRACOLOR PLUS FA #09 "GRAY"	
G-05	GROUT	CUSTOM BUILDING PRODUCTS	543 "DRIFTWOOD"	

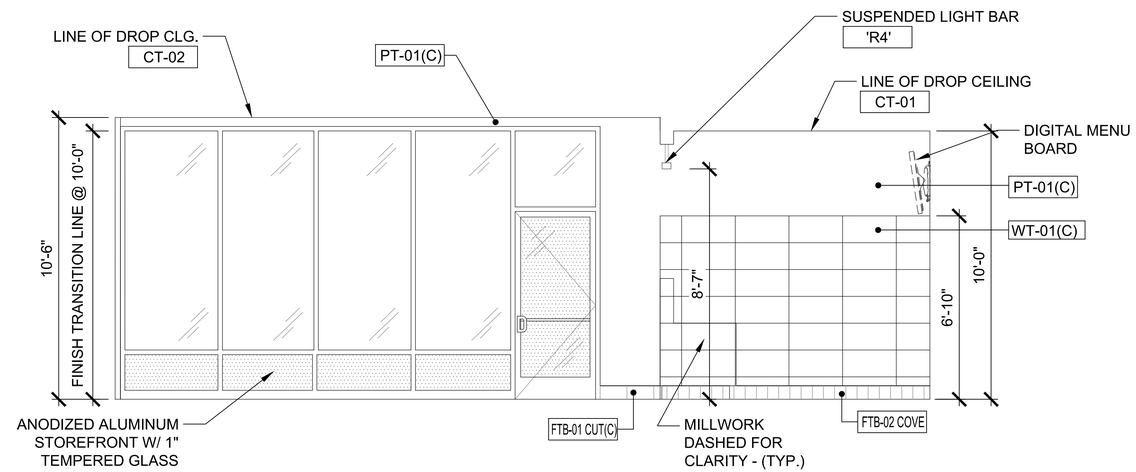

2 DINING / SERVICE AREA
SCALE: 3/8" = 1'-0"

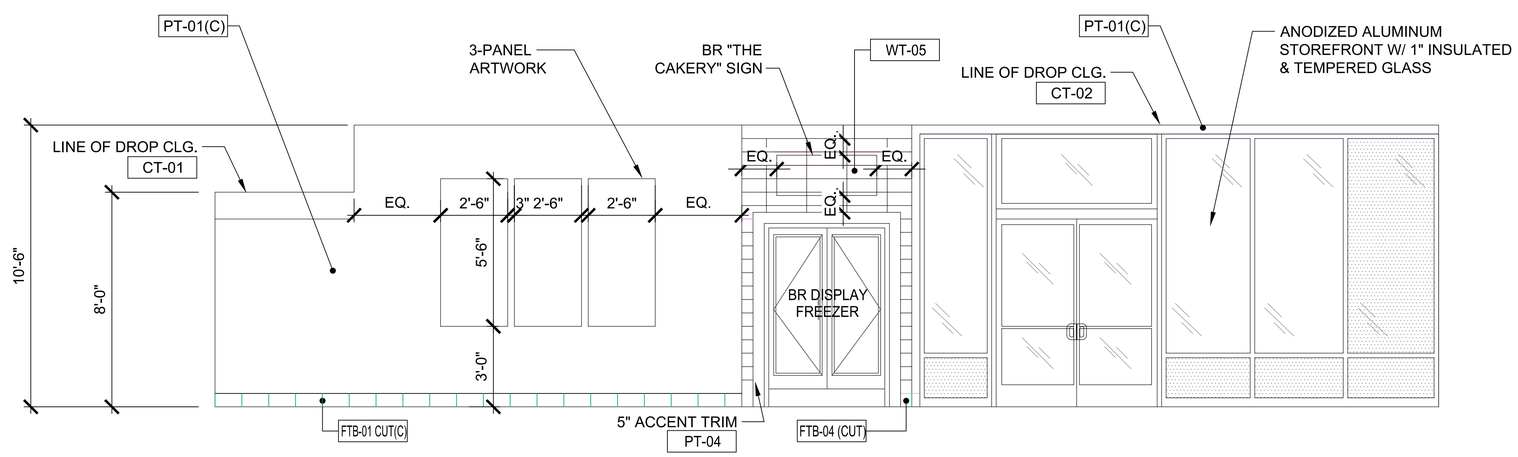

1 DINING AREA
SCALE: 3/8" = 1'-0"

dunkin' brands

E+H ARCHITECTS, P.C.
750 OLD HICKORY BLVD., SUITE 150-3
BRENTWOOD, TN 37027
p|615.377.3111
www.EandHArch.com

NO	DESCRIPTION	DATE
	REVISIONS	

1402 WESTERN BOULEVARD
TARBORO, NORTH CAROLINA

INTERIOR ELEVATIONS AND FINISH SCHEDULE

P C # 365111

NORTH CAROLINA REGISTERED SEAL 16017 ARCHITECT ROY A. WILLIAMS

A4.0

PERMIT ISSUE DATE: 10-20-2023

NOTE: DRAWINGS ARE NOT TO SCALE IF SHEET IS PLOTTED ON 11" x 17"

INTERIOR FINISH MATERIAL SCHEDULE

CODE	MATERIAL	MANUFACTURER	PRODUCT #	DESCRIPTION
FT-1	GENERAL FLOOR TILE	DAL-TILE	PF05 "ASH GREY STD"	12"X24" - PUBLIC AREAS USE WITH GROUT G-01
FTB-1	FLOOR TILE BASE	DAL-TILE	PF05 "ASH GREY STD"	CUT TILE TO 6" HIGH, INSTALL WITH BRUSHED NICKEL SCHLUTER STRIP CAP JOLLY-ANIGB
FT-2	BACK OF HOUSE QUARRY TILE	DAL-TILE	"ASHEN GREY STD"	6"X6" - EMPLOYEE AREAS USE WITH GROUT G-02
FTB-2	FLOOR TILE BASE	DAL-TILE	"ASHEN GREY STD"	5"X6" COVE BASE
WT-1	"SWITCH" WALL TILE	DAL-TILE	COOL SWITCH TILE N51812241P2	12"X24" - STACK BOND USE WITH GROUT G-03
WT-2	ACCENT WALL TILE	DAL-TILE	PORTFOLIO SERIES PF09 "CHARCOAL"	6"X24" - STACK BOND USE WITH GROUT G-04
WT-3	WASH ROOM FIELD WALL TILE	DAL-TILE	"WHITE" N5166181P2 MATTE FINISH	6"X18" USE WITH GROUT G-05
WT-4	WASH ROOM ACCENT WALL TILE	DAL-TILE	'BLOCK PARTY' SERIES N515661P2	6"X6" STACK BOND (TILE FACE PATTERN IS RANDOM) USE WITH GROUT G-05
WT-5	CAKERY WALL	DAL-TILE	AR09 COLUMN GRAY	ARTICULO 6"X18" WALL TILE
PT-1	PAINT	SHERWIN WILLIAMS	"ON THE ROCKS" SW7671	SATIN/EGGSHELL FINISH FOR WALLS
PT-2	PAINT	SHERWIN WILLIAMS	"IRON ORE" SW7069	SEMI-GLOOS FINISH FOR DOORS /TRIM
PT-3	PAINT	SHERWIN WILLIAMS	"ICE CUBE" SW6252	FLAT FOR CEILINGS
FRP-1	FRP WALL PANEL	CRANE COMPOSITES	"GLASBOARD" SERIES "PEARL GREY"	EMBOSSED PEBBLE FINISH
G-01	GROUT	MAPEI	UPTRACOLOR PLUS FA #107 "IRON"	
G-02	GROUT	MAPEI	UPTRACOLOR PLUS FA #47 "CHARCOAL"	
G-03	GROUT	MAPEI	UPTRACOLOR PLUS FA #38 "AVALANCHE"	
G-04	GROUT	MAPEI	UPTRACOLOR PLUS FA #10 "BLACK"	
G-05	GROUT	MAPEI	UPTRACOLOR PLUS FA #09 "GRAY"	
G-05	GROUT	CUSTOM BUILDING PRODUCTS	543 "DRIFTWOOD"	

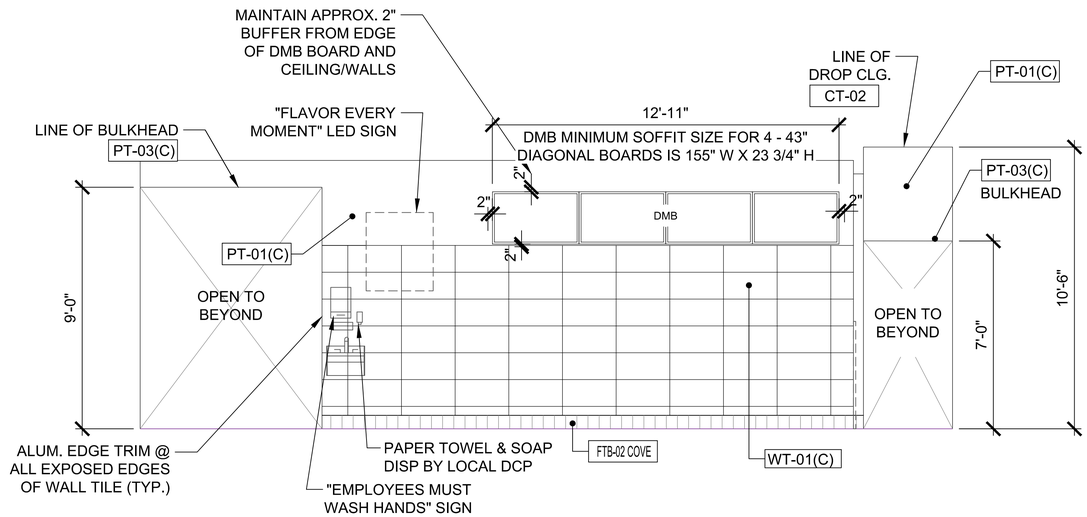

2 SERVICE AREA
SCALE: 3/8" = 1'-0"

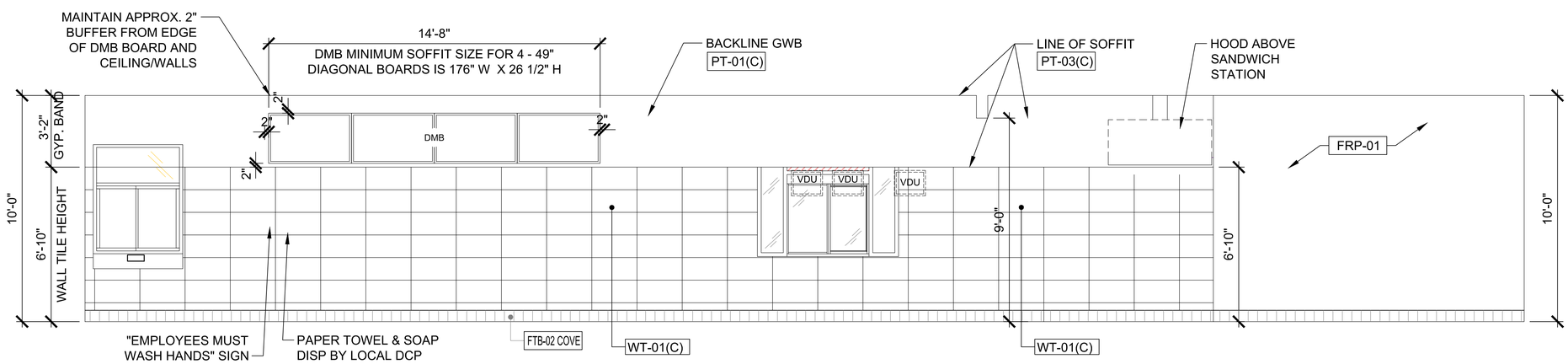

1 SERVICE AREA
SCALE: 3/8" = 1'-0"

dunkin' brands

E+H ARCHITECTS, P.C.
750 OLD HICKORY BLVD., SUITE 150-2
BRENTWOOD, TN 37027
p615.377.3111
www.EandHArch.com

NO	DESCRIPTION	DATE
	REVISIONS	

1402 WESTERN BOULEVARD
TARBORO, NORTH CAROLINA

INTERIOR ELEVATIONS AND FINISH SCHEDULE

P C # 365111

NORTH CAROLINA REGISTERED SEAL 16017 ARCHITECT ROY A. WILLIAMS

A4.1

PERMIT ISSUE DATE: 10-20-2023

GENERAL NOTES:

1. G.C. SHALL VERIFY ALL WALL FINISHES WITH DUNKIN CORP./ACCOUNT VENDOR PRIOR TO PURCHASE AND INSTALLATION.
2. SEE ELECTRICAL DRAWINGS FOR ALL EQUIPMENT OUTLET HEIGHTS, LOCATIONS, AND REQUIREMENTS.
3. SEE PLUMBING DRAWINGS FOR ALL EQUIPMENT PLUMBING REQUIREMENTS.

ALTERNATE TOILET EQUIPMENT
ALTERNATE "HANDS FREE" TOILET EQUIPMENT IS AVAILABLE FOR OPTIONAL USE IN BATHROOMS:

ALTERNATE WALL MOUNTED LAVATORY:
WALL MOUNTED LAVATORY- "COMRADE" BY AMERICAN STANDARD #0124.131. PROVIDE ELECTRIC HANDWASHING FAUCET. SLOAN OPTIMA # ETF-600 W/ TRANSFORMER#EL-154 AND AERATOR #ETEF- 1024- A.

ALTERNATE TOILET:
"MADERA" BY AMERICAN STANDARD - #3043.102. PROVIDE SLOAN FLUSHOMETER ROYAL #111ES-S W/ TRANSFORMER # EL-154; RECOMMENDED WORKING PRESSURE BETWEEN 25 psi AT VALVE WHEN FLUSHING AND 80 psi STATIC.

TOILET ACCESSORY SCHEDULE NOTES

1) MOUNT ALL TOILET ACCESSORIES IN STRICT ACCORDANCE W/ CURRENT STATE & LOCAL ACCESSIBILITY CODES.
2) PROVIDE ANCHORS AS REQD FOR MOUNTING ALL ACCESSORIES.
3) GC TO FIELD VERIFY ALL SIZES & DIMENSIONS.
4) TOILET TISSUE AND PAPER TOWEL DISPENSERS SUPPLIED BY LOCAL DCP AND INSTALLED BY GC.
5) ALL HAND DRYERS TO BE PURCHASED VIA NATIONAL ACCOUNTS - ALL DRYER COVERS SHOULD HAVE THE DUNKIN' DONUTS LOGO, WITH THE BRAND APPROVED GREEN MESSAGING BELOW IT.

INTERIOR FINISH MATERIAL SCHEDULE

CODE	MATERIAL	MANUFACTURER	PRODUCT #	DESCRIPTION
FT-1	GENERAL FLOOR TILE	DAL-TILE	PF05 "ASH GREY STD"	12"X24" - PUBLIC AREAS USE WITH GROUT G-01
FTB-1	FLOOR TILE BASE	DAL-TILE	PF05 "ASH GREY STD"	CUT TILE TO 6" HIGH, INSTALL WITH BRUSHED NICKEL SCHLUTER STRIP CAP JOLLY-ANIGB
FT-2	BACK OF HOUSE QUARRY TILE	DAL-TILE	"ASHEN GREY STD"	6"X6" - EMPLOYEE AREAS USE WITH GROUT G-02
FTB-2	FLOOR TILE BASE	DAL-TILE	"ASHEN GREY STD"	5"X6" COVE BASE
WT-1	"SWITCH" WALL TILE	DAL-TILE	COOL SWITCH TILE N51812241P2	12"X24" - STACK BOND USE WITH GROUT G-03
WT-2	ACCENT WALL TILE	DAL-TILE	PORTFOLIO SERIES PF09 "CHARCOAL"	6"X24" - STACK BOND USE WITH GROUT G-04
WT-3	WASH ROOM FIELD WALL TILE	DAL-TILE	"WHITE" N5166181P2 MATTE FINISH	6"X18" USE WITH GROUT G-05
WT-4	WASH ROOM ACCENT WALL TILE	DAL-TILE	'BLOCK PARTY' SERIES N515661P2	6"X6" STACK BOND (TILE FACE PATTERN IS RANDOM) USE WITH GROUT G-05
WT-5	CAKERY WALL	DAL-TILE	AR09 COLUMN GRAY	ARTICULO 6"X18" WALL TILE
PT-1	PAINT	SHERWIN WILLIAMS	"ON THE ROCKS" SW7671	SATIN/EGGSHELL FINISH FOR WALLS
PT-2	PAINT	SHERWIN WILLIAMS	"IRON ORE" SW7069	SEMI-GLOOS FINISH FOR DOORS /TRIM
PT-3	PAINT	SHERWIN WILLIAMS	"ICE CUBE" SW6252	FLAT FOR CEILINGS
FRP-1	FRP WALL PANEL	CRANE COMPOSITES	"GLASBOARD" SERIES "PEARL GREY"	EMBOSSED PEBBLE FINISH
G-01	GROUT	MAPEI	UPTRACOLOR PLUS FA #107 "IRON"	
G-02	GROUT	MAPEI	UPTRACOLOR PLUS FA #47 "CHARCOAL"	
G-03	GROUT	MAPEI	UPTRACOLOR PLUS FA #38 "AVALANCHE"	
G-04	GROUT	MAPEI	UPTRACOLOR PLUS FA #10 "BLACK"	
G-05	GROUT	MAPEI	UPTRACOLOR PLUS FA #09 "GRAY"	
G-05	GROUT	CUSTOM BUILDING PRODUCTS	543 "DRIFTWOOD"	

ADA NOTES:

THE GENERAL CONTRACTOR SHALL ACQUAINT HIMSELF WITH THE BARRIER FREE REQUIREMENTS FOR THE APPLICABLE STATES AND THE AMERICAN DISABILITIES ACT (ADA) AND SHALL ENSURE THAT THIS FACILITY WILL BE ACCESSIBLE ACCORDING TO THE STRICTER REQUIREMENTS OF THE APPLICABLE STANDARDS. THE FOLLOWING IS A PARTIAL LIST OF REQUIREMENTS.

1. DOOR HARDWARE SHALL BE MOUNTED BETWEEN 36" AND 42" ABOVE FLOOR AND BE LEVER TYPE.
2. TOILETS:
   - A. LAVATORY TO HAVE LEVER HANDLES, SELF METERING FAUCETS OR SPRING FAUCET. FAUCETS SHALL BE SET TO REMAIN OPEN FOR 10 SECONDS MINIMUM.
   - B. A COAT HOOK 48" ABOVE THE FLOOR SHALL BE MOUNTED ADJACENT TO THE BARRIER FREE STALL DOOR.
   - C. LOCATE THE WATER CLOSET 16" TO 18" FROM THE CENTER LINE OF THE FIXTURE TO THE WALL. THE SEAT WILL BE 17" TO 19" ABOVE THE FLOOR TO THE TOP OF SEAT. FLUSH HANDLE TO BE ON EXPOSED SIDE OF WATER CLOSET.
   - D. PROVIDE ONE 42" AND ONE 36" LONG x 1 1/2" OUTSIDE DIAMETER PEENED GRAB BARS, 1 1/2" FROM THE WALL WITH ONE BEHIND AT 12" FROM CENTER LINE OF WATER CLOSET ON ONE SIDE. ONE ADJACENT TO AT 12" FROM THE WALL 33"-36" PARALLEL TO AND ABOVE THE FLOOR.
   - E. LAVATORY TO BE MOUNTED 34" MAX. ABOVE THE FINISHED FLOOR TO RIM WITH KNEE SPACE OF 30" IN WIDTH AND 27" IN CLEAR HEIGHT. (29" CLEAR UNDER FRONT EDGE)
   - F. INSTALL MIRROR 40" MAX. ABOVE THE FINISHED FLOOR TO BOTTOM EDGE OF REFLECTING SURFACE (MIRROR GLASS BOTTOM) AND 72" TO TOP.
   - G. DISPENSERS TO BE MOUNTED A MAXIMUM OF 42" ABOVE THE FLOOR TO ALL OPERATING OR DISPENSING SLOTS.
   - H. TOILET PAPER DISPENSERS MOUNTED 19" MIN. TO CENTER LINE ABOVE THE FLOOR AND 7" MINIMUM AND 9" MAXIMUM FROM FRONT EDGE OF WATER CLOSET MEASURED TO THE CENTERLINE OF THE DISPENSER

RESTROOM EQUIPMENT SCHEDULE

CODE	ITEM	MANUFACTURER & PRODUCT #	MOUNTING HEIGHT	REMARKS
1	GRAB BARS	ASI 3701-18P (18"), -36P (36") & -42P (42")	36" MAX. A.F.F.	NOTE C
2	SWING-UP GRAB BAR	BOBRICK #B-4998.99	SEE INSTALLATION INSTRUCTIONS	NOTE C, INSTALL WHEN REQUIRED
3	TOILET PAPER HOLDER	KC PROFESSIONAL 09551	20" BOT OF UNIT, SURFACE MOUNTED	
4	COAT HOOK	ASI 0751	48" A.F.F. , MOUNTED ON DOOR	
5	SOAP DISPENSER	DERMA FOAM E- KAY CHEMICAL COMPANY		NOTE A, C
6	AUTOMATIC HAND DRYER	"WORLD VERDIDRI" Q974-A - WHITE OR Q973-A - STAINLESS OR "EXCEL" XLERATOR THIN AIR TA-SI WG - WHITE OR TA-SI WG - STAINLESS		NOTE A, C & E
7	HAND DRYER WALL GUARD	WORLD	-	NOTE F
8	MIRROR (18"x30")	ASI 0620-2436	40" A.F.F. TO BOTTOM	NOTE C
9	TRASH RECEPTACLE	ASI 0458	41"-45" A.F.F. TO OPENING FOR ADA	
10	BABY CHANGING STATION	ASI 9012 HORIZONTAL OR ASI 9015 VERTICAL	27" TO BOTTOM OF UNIT	NOTE C
11	SANITARY NAPKIN DISPOSAL	ASI 0852	24" TO TOP OF UNIT	WOMEN'S RESTROOM ONLY
12	SEAT COVER DISPENSER (OPTIONAL)	ASI 0477 SM		(OPTIONAL)
13	WALL SHELF	ASI 0692-516 (5"x16")	42" A.F.F. FOR ADA; NOTE C	(OPTIONAL)

NOTE: DRAWINGS ARE NOT TO SCALE IF SHEET IS PLOTTED ON 11" x 17"

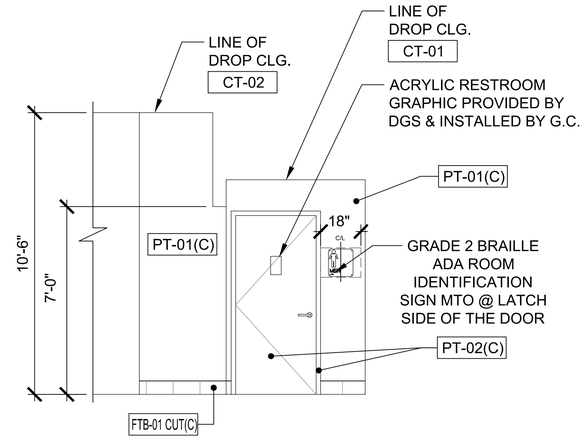

4 INT ELEVATIONS AT RESTROOM VEST
SCALE: 3/8" = 1'-0"

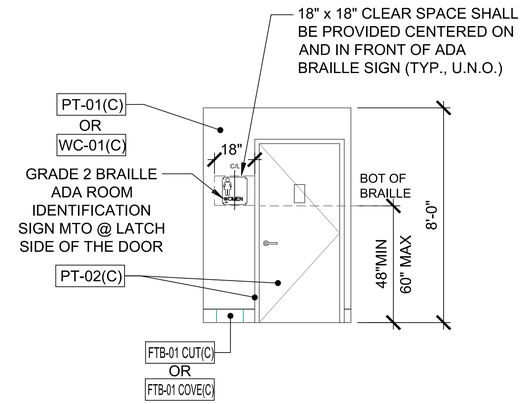

3 INT ELEVATIONS AT RESTROOM VEST
SCALE: 3/8" = 1'-0"

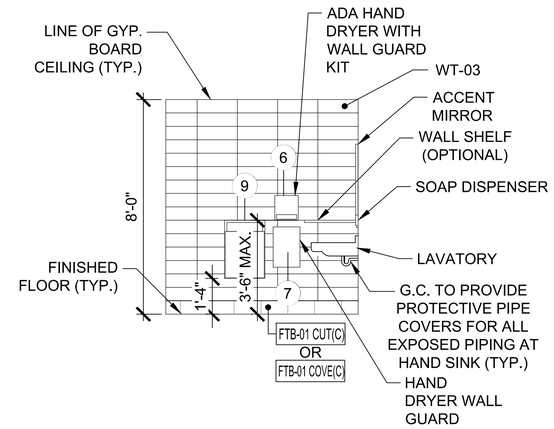

2 INTERIOR ELEVATIONS AT RESTROOMS
SCALE: 3/8" = 1'-0"

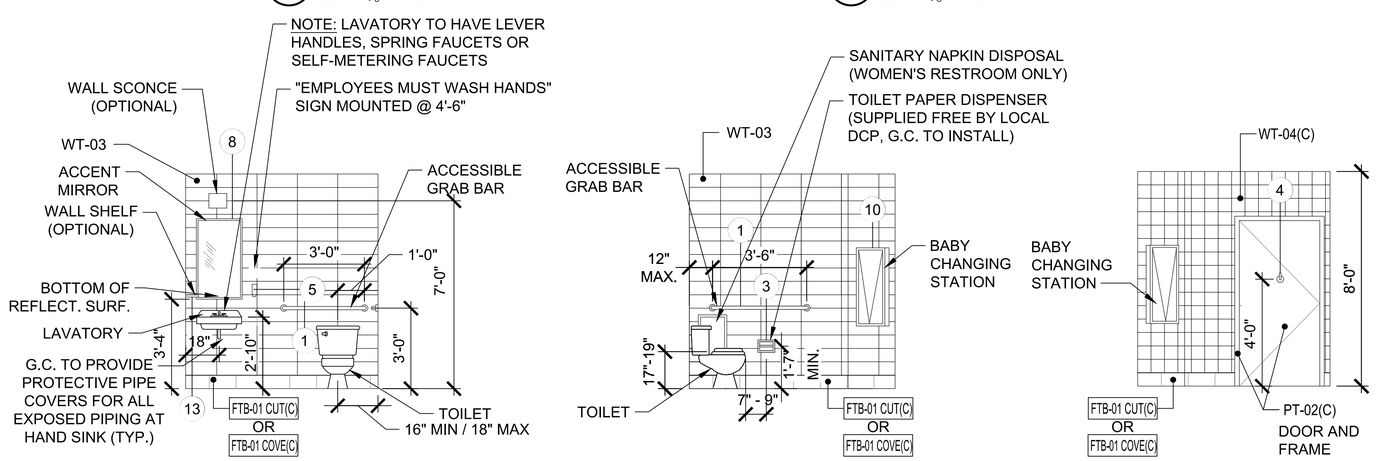

1 INTERIOR ELEVATIONS AT RESTROOMS
SCALE: 3/8" = 1'-0"

dunkin' brands

e+H ARCHITECTS, P.C.
750 OLD HICKORY BLVD., SUITE 50-2
BRENTWOOD, TN 37027
p|615.377.3111
www.EandHArch.com

NO	DESCRIPTION	DATE
	REVISIONS	

1402 WESTERN BOULEVARD
TARBORO, NORTH CAROLINA

INTERIOR ELEVATIONS

P C # 365111

NORTH CAROLINA REGISTERED SEAL 16017 ARCHITECT ROY A. WILLIAMS

A4.2

PERMIT ISSUE DATE: 10-20-2023

ROOM FINISH SCHEDULE

NO.	ROOM NAME	FLOOR CODE	BASE CODE	WALL CODE	CEILING CODE	NOTES
101	SEATING AREA	FT-1	FTB-1	NOTE #1	ACT-02	1,3,4
102	SALES AREA	FT-1	FTB-1	NOTE #1	ACT-01	1,3,4
103	DRIVE THRU	FT-1	FTB-1	NOTE #1	ACT-01	3,4
104	HALLWAY	FT-1	FTB-1	NOTE #1	ACT-02	1,3,4
105	MEN	FT-1	FTB-1	WT-3/WT-4	P-2	1,2,3,4
106	WOMEN	FT-1	FTB-1	WT-3/WT-4	P-2	1,2,3,4
107	OFFICE	FT-2	FTB-2	FRP-01	ACT-01	2,3,4
108	PREP AREA	FT-2	FTB-2	FRP-01	ACT-01	3,4
109	SERVICE AREA	FT-2	FTB-2	NOTE #1	ACT-01	1,2,3,4

NOTES:
1. REFER TO INTERIOR ELEVATIONS FOR PROPER WALL FINISHES IN DESIGNATED AREA.
2. SEE INTERIOR ELEVATIONS FOR DOOR FINISHES.
3. PROVIDE ALUMINUM CORNER GUARDS AT ALL OUTSIDE CORNERS OF WALLS, SEE FLOOR PLAN.
4. GC TO VERIFY ALL FINISHESWITH DBI CM PRIOR TO ORDERING MATERIALS.

DOOR SCHEDULE

NO.	DOOR DATA				FINISH	FRAME DATA		FINISH	HDWR. SET #	NOTES
	LOCATION	SIZE	MATERIAL	TYPE	INT/EXT	MATERIAL	TYPE	INT/EXT		
001	ENTRY	3'-0" X 7'-0" X 1-3/4"(PR)	ALUM/GL.	A	CLEAR	ALUM	--	CLEAR	1	1
002	ENTRY	3'-0" X 7'-0" X 1-3/4"	ALUM/GL.	A	CLEAR	ALUM	--	CLEAR	1	1
003	REAR SERVICE	4'-0" X 7'-0" X 1-3/4"	H.M.	B	SEE ELEVS.	H.M.	1	PT-2/EP-1	4	
004	WOMEN'S TOILET	3'-0" X 6'-8" X 1-3/4"	WOOD	C	SEE ELEVS.	H.M.	1	SEE ELEVS.	3	2
005	MEN'S TOILET	3'-0" X 6'-8" X 1-3/4"	WOOD	C	SEE ELEVS.	H.M.	1	SEE ELEVS.	3	2
006	OFFICE	3'-0" X 6'-8" X 1-3/4"	WOOD	C	SEE ELEVS.	H.M.	1	SEE ELEVS.	2	2

NOTES

1. GC SHALL INSTALL CUSTOME DD DOOR HANDLES AS SUPPLIED BY FRANCHISEE
2. UNDERCUT DOOR 1"
3. G.C. SHALL SUBMIT DOOR/HARDWARE SPECIFICATIONS FOR OWNER REVIEW/APPROVAL PRIOR TO ORDERING

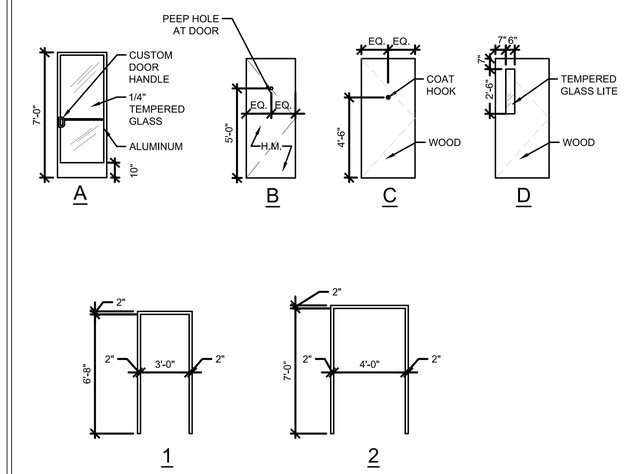

1 DOOR AND FRAME TYPES

1/4" = 1'-0" NOTE:

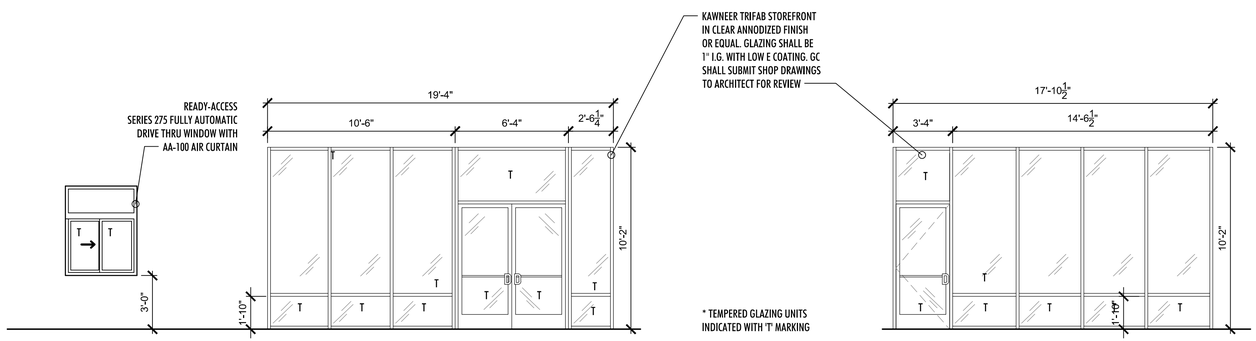

1 STOREFRONT ELEVATIONS
SCALE: 1/4" = 1'-0"

HARDWARE SCHEDULE

	QUANTITY	MANUFACTURER	HARDWARE	FINISH
1	1	ADAMS RITE	MS1850A DEADLOCK	
	1	ADAMS RITE	4085 HEADER BOLT ACCESSORY	
	1	ADAMS RITE	4015 THRESHOLD BOLT ACCESSORY	
	2	LCN	CLOSER 4041	ALUM.
	2	LCN	DROP PLATE 4040-28	ALUM.
	1 PR	KAWNEER	STANDARD OFFSET PIVOTS	ALUM.
	1	KAWNEER	INTERMEDIATE OFFSET PIVOTS	ALUM.
	---	KAWNEER	WEATHER-STRIPPING: STD. W/BOT. RAIL SWEEP	NA
	1	KAWNEER	STANDARD ALUM. THRESHOLD	MILL
	1	CUSTOM	DUNKIN DONUTS "D" PULL HANDLE	ALUM.
2	1 PR	HAGER	HINGES 1279	US26D
	1	HAGER	SPRING HINGE 1250	US26D
	1	HAGER	LOCKSET 3480 WTN	US26D
	1	HAGER	FLOOR STOP 241F	US26D
3	1 1/2 PR	HAGER	HINGES BB-1279	US26D
	1	HAGER	LOCKSET 3440 AT RESTROOMS	US26D
	1	HAGER	FLOOR STOP 241F	US26D
	1	HAGER	KICK PLATE 214S 10" x 2"	BLACK
	1	HAGER	CLOSER 5200 MLT 1-4	ALUM.
4	1 1/2 PR	HAGER	HINGES BB-1191	32D
	1	HAGER	LOCKSET 3495 WTN	US26D
	1	HAGER	FLOOR STOP 241F	US26D
	1	HAGER	KICK PLATE 214S 10" x 2"	BLACK
	1	HAGER	CLOSER 5400 PA 2-5 HDHOS	ALUM.
	1	HAGER	THRESHOLD 413S	MIL
	1	HAGER	SWEEP 802S B	MIL
	1	HAGER	HOLDER/STOP 268S	US26D
	1	HAGER	SET, WEATHERSTRIPPING 800S B	MIL
	1	HAGER	LOCK GUARD 341 D	32D
	1	HAGER	DOOR VIEWER 1756	US26D

NOTES :
1. SEE DOOR SCHEDULE AND FLOOR PLAN FOR QUANTITY, SIZE, AND DIRECTION OF DOOR SWING.
2. ALL I.C. CORE LOCKSETS AND CYLINDERS ARE SUPPLIED WITH CONSTRUCTION CORES.
3. SUBMIT ALL HARDWARE SUBSTITUTIONS TO ARCHITECT FOR APPROVAL.
4. ALL DOORS, HARDWARE, AND SIGNAGE SHALL COMPLY WITH ADA REQUIREMENTS AND LOCAL/STATE CODES.

E + H ARCHITECTS, P.C.
750 OLD HICKORY BLVD., SUITE 50-2
BRENTWOOD, TN 37027
p615.377.3111
www.EandHArch.com

NO.	DESCRIPTION	DATE
	REVISIONS	

1402 WESTERN BOULEVARD
TARBORO, NORTH CAROLINA

SCHEDULES & DETAILS

P C # 365111

NORTH CAROLINA REGISTERED SEAL 16017 ARCHITECT ROY A. WILLIAMS

A5.0

PERMIT ISSUE DATE: 10-20-2023